RADIO

Many headlines like this have raised the question

RADIO RACKETEERS ASSAILED BY COURT

Declaring that radio repairmen were fleec
ing customers by charging all the traffic

Should Radio Service Dealers be *Licensed*?

RAYTHEON
HAS THE ANSWER!

and will announce it shortly . . .

Screaming headlines in the New York Times, the World Telegram, the Herald-Tribune, articles in *The Reader's Digest* — *you* know the unfavorable talk they have helped spread, the hardship they have worked on every *honest* radio service dealer.

DEALER LICENSES DISCUSSED

You are well aware that federal regulation, *dealer-licensing* and even finger printing, are being suggested and discussed by a lot of influential people.

What's the answer? *Raytheon will announce it shortly* for Raytheon has been working for years on a new, foolproof way to protect the public—and to help the *ethical radio service man.* A revolutionary new merchandising plan that will raise the public's opinion of the radio servicing profession and protect the reliable service dealer from outside interests.

GREAT COMPETITIVE ADVANTAGE

You can see the tremendous competitive advantage this Raytheon plan will give every dealer who can qualify! Watch for all the facts on the Raytheon program to protect the public — and help the honest service-dealer!

Raytheon Manufacturing Company
RADIO RECEIVING TUBE DIVISION
NEWTON MASSACHUSETTS · LOS ANGELES · NEW YORK
CHICAGO · ATLANTA

COPYRIGHT 1945 RAYTHEON MANUFACTURING COMPANY

DEVOTED TO RESEARCH AND THE MANUFACTURE OF TUBES FOR THE NEW ERA OF ELECTRONICS

MICA CERAMIC INSULATION
Molded TO YOUR SPECIFICATIONS

MYKROY
PERFECTED MICA CERAMIC INSULATION

Holds to Tolerances up to ±.001"

In part after part, and in any quantity, Mykroy molds and *holds* to critical tolerances. In this, the only ceramic which can be molded under heat and pressure to such close tolerances, are combined many other highly desirable properties that distinguish Mykroy from all other types of insulating materials.

Unique in the class of glass-bonded mica ceramics, Mykroy possesses *electrical characteristics of the highest order* which do not shift under any conditions short of actual destruction of the material itself. Furthermore it will not warp—is impervious to gas, oil and water—withstands heat up to 1000° F and will not char or carbonize.

Its mechanical strength is comparable to cast iron and because it bonds firmly to metals it is particularly suited to molding parts with metal inserts. Even where price is a factor it competes with many standard insulating materials of lower electrical properties.

For improved performance and better quality in your new products investigate the many advantages of Mykroy. Write for samples and full information.

10TH ANNIVERSARY 1935 MYKROY 1945 ELECTRONIC MECHANICS INC.

MADE EXCLUSIVELY BY

ELECTRONIC MECHANICS INC.

70 CLIFTON BLVD., CLIFTON, N. J.
CHICAGO 47: 1917 N. Springfield Ave., Tel. Albany 4310
EXPORT OFFICE: 89 Broad Street, New York 4, New York

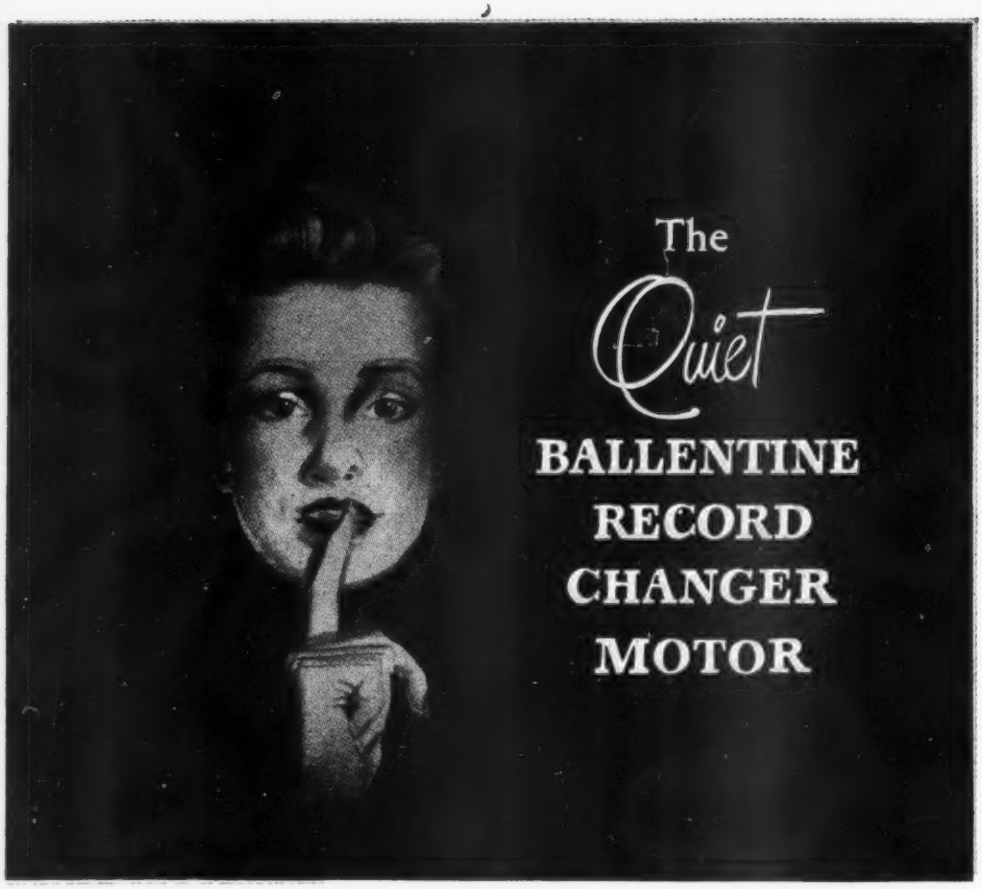

The *Quiet Ballentine* Changer Motor

has these four characteristics achieved by advanced design, skilled engineering and precision manufacturing

- Lowest Rumble
- Highest Efficiency
- Most Compact Design
- Longest Life

The *Quiet Ballentine* Changer Motor is recommended to record changer manufacturers seeking to provide the ultimate in performance.

RUSSELL ELECTRIC COMPANY

370 WEST HURON STREET • CHICAGO 10, ILLINOIS

Manufacturers of **BALLENTINE RECORD CHANGER MOTOR**

RADIO

Published by RADIO MAGAZINES, INC.

John H. Potts.....Editor
Sanford R. Cowan.....Publisher

NOVEMBER 1945 • Vol. 29, No. 11

CONTENTS

COVER

Placing 6AK5 vacuum tubes on a rotary aging rack. In one revolution of the drum, the tubes are completely aged for test. This type of tube is one of the most popular of the miniature size developed for war use.
(*Western Electric Photograph*)

ARTICLES

High Fidelity—*A. C. Matthews* 33
Effective Permeability of High Frequency Iron Cores—*W. J. Polydoroff and A. J. Klapperich* 38
Radio Insulating Materials, Part 3—*Albert H. Postle* 42
Hermetic Sealing—*Geoffrey Herbert* 44
Recent Radio Inventions—Distortion Correction in Wave Transmission; Radio Receiver; Antenna System; Electric Circuits; Radio Transmitter; Signaling System; Frequency Control System; Reactance Tube Circuit; Reactance Control Circuit; FM Transceiver 48
Radio Design Worksheet, No. 42: Some Notes on Automatic Volume Control; Parallel Resonance 51

MISCELLANEOUS

Transients 4
TECHNICANA
Crystal Oscillator Theory 16
Sound Distributor 25
BOOK REVIEWS 28
This Month 53
New Products 56
Advertising Index 75

John H. Potts.....President
Sanford R. Cowan..Adv. Mgr.—Sec'y-Treas.
Harry N. Reizes.....Adv. Sales
David Saltman.....Adv. Prod. Mgr.
Evelyn A. Eisenberg.....Edit. Prod. Mgr.
Miriam Birnbaum.....Circl. Manager

MID-WEST OFFICE
Harold J. Sugarman, Manager
Charles H. Farrell, Adv. Sales
82 West Washington St., Chicago 2, Ill.
ANdover 2840

PACIFIC COAST REPRESENTATIVE
H. W. Dickow
1387 40th Ave., San Francisco 22, Calif.

GREAT BRITAIN REPRESENTATIVE
Radio Society of Great Britain,
New Ruskin House, Little Russell St.,
London, W.C. 1, England

Transients

OPA MUDDLE

★Unquestionably the greatest hindrance to orderly reconversion in the radio industry is the failure of the OPA to take a realistic view of the cost structure in the production of radio sets and components. The percentage increases allowed in final pricing have failed adequately to reflect the enormously increased costs of production. While many manufacturers are going ahead with production with nothing to look forward to but a loss on each unit turned out, and the hope that this loss will be made up when prices are finally raised to a reasonable figure, others have elected to wait until the whole mess is straightened out on a satisfactory basis.

Although the OPA has agreed to readjust prices for manufacturers who show a loss after a six months' production period, this policy tends even more to unsettle the industry. It is renegotiation in reverse, with private industry, instead of the government, risking its money. It is an incentive to wastefulness, because those companies which can afford to take heavy losses with the assurance that they will be reimbursed when prices are readjusted, will feel under no great obligation to operate at top efficiency. It is unfair to the small manufacturer with no adequate reserves to finance himself during this period.

Yet those manufacturers who have decided to sit back and wait until a suitable pricing schedule has been evolved face the danger of loss of their markets to those who have gambled on the future. There is bound to be considerable deflation in the radio-electronic industry, and only those who fight for their place in the postwar picture can hope to survive. A public which has become accustomed to getting along without new radios during the war period may decide to wait a little longer if forthcoming sets seem overpriced. In fact, the volume of sales of the first midget receivers offered a few months ago at what seemed high prices was very disappointing. Despite the pent-up need, it is going to be necessary to do a good selling job, and to offer attractive features in the new sets, if they are to bring a satisfactory sales price and sell in quantity.

Many companies are shipping sets abroad to get away from price restrictions here, and apparently the same thing works in reverse because there has been some influx of receivers of foreign manufacture. At the present time there appears to be no danger that the quantity of receivers imported will be sufficient to blunt the consumer demand, primarily because those we have seen offer no attractive features and appear to be the loft-production variety. However, the threat exists that some enterprising foreign manufacturer may turn out a really good set at a reasonable price and make a name for himself while the industry here is trying to get over its OPA blues.

A definite pricing system which is fair to all concerned should be worked out immediately. If these prices are too high, loss of sales volume will result, and those companies which are able to produce more efficiently will soon be selling their products below ceiling prices. If these prices are too low, many companies will be forced out of business, unemployment will increase, and the whole radio industry will find itself in the midst of a depression. It is apparent that the latter danger is the more serious. The engineering skill and production ability which have been characteristic of war-time production will carry over into the postwar period, if given a chance. The radio industry has the right to demand that chance, and in all fairness the OPA should recognize this right.

LOOP RECEIVERS

★Recently, while your Editor was in Chicago, a remarkable demonstration of the advantages of the loop over the conventional auto antenna was given the writer by Fred Schnell, head of the radio division of the Chicago police organization. Using an iron-core electrostatically shielded loop on a frequency of 1740 kc, the writer found it possible to hear clearly signals which were hopelessly "down in the mud" on the usual antenna. On streets where the noise level had previously been so high that radio reception was heretofore impossible, satisfactory reception was obtained with the loop.

While either an air core or an iron core loop, if electrostatically shielded, will afford a greatly improved signal-to-noise ratio, the iron core type is so much smaller that it offers distinct advantages. The actual improvement in signal-to-noise ratio is of the order of four to one in favor of the loop.

An extension of this technique to home receivers should merit careful consideration. In an article appearing in this issue, the well-known authority on iron cores for radio applications, W. G. Polydoroff, presents some hitherto unpublished data which greatly simplifies the design of iron core coils, which had hitherto been a cut-and-try proposition. The loop used in the police radio demonstration was also designed by Polydoroff.

—J. H. P.

IRC "SET-UP" FOR SERVICE

IRC RESISTORS ARE "ON LOCATION"

Everywhere!

From coast to coast and border to border you'll find IRC "specialists" ready to help you with your resistor problems. These alert and capable organizations are ready to assist you in determining the precise resistors for your specific applications. IRC can render this unbiased technical service because it is the largest exclusive producer of resistance devices, making more types of resistors in more shapes, for more applications than any other manufacturer in the world.

Because of volume production combined with specialized engineering skill, orders in any quantity can be filled promptly. Your inquiries will be given immediate and efficient attention. Names and addresses of your nearest IRC Distributors will be furnished on request.

ATLANTA
Hollingsworth & Still, 407 Norris Bldg.

BOSTON
Ray Perron 131 Clarendon St.

BUFFALO
Harry B. Segar Ellicott Square Bldg.

CHICAGO
S. B. Darmstader
308 W. Washington St.

CLEVELAND
Fred Bell 1400 W. 25th St.

DALLAS
George E. Anderson Santa Fe Bldg.

DETROIT
Koehler-Pasmore
8316 Woodward Ave.

INDIANAPOLIS
Vernon C. Macnabb, 915 Riveria Dr.

KANSAS CITY, MO.
C. W. Reid 1825 McGee Avenue

LOGAN, UTAH
Ronald G. Bowen 83 E. First St.

LOS ANGELES
Dave N. Marshank
672 S. Lafayette Park Place

NEW YORK
International Resistance Co.
A. H. Hardwick 165 Broadway

PITTSBURGH
George O. Tanner 508 Grant St.

SAN FRANCISCO
James P. Hermans 1278 Mission St.

SEATTLE
Dave M. Lee 2626 Second Ave.

ST. LOUIS
Norman W. Kathrinus 1218 Olive St.

ST. PAUL
J. U. McCarthy 1725 Hillcrest Ave.

INTERNATIONAL RESISTANCE CO.

DEPT. 7-K

401 NORTH BROAD STREET • PHILADELPHIA 8, PA.

Out of Two Laboratories

comes a *NEW* railroad communications

● Sperry's Research Laboratory where Railroad Communications System was designed and developed

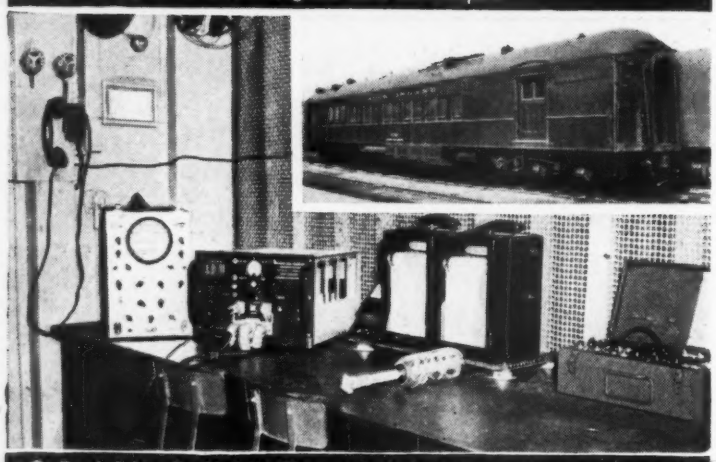

● Rock Island's Mobile Electronic Laboratory where equipment was put to rugged test

THE ENGINEERING STAFF of the Sperry Gyroscope Company, in collaboration with engineers of Rock Island Lines, has perfected a new *system* of railroad communications.

Designed especially for railroads by Sperry and tested extensively by Rock Island, this system offers to the railroad industry microwave applications, secret until now, which Sperry's vast engineering group developed during the war years in co-operation with the U. S. Navy. With the aid of Rock Island engineers working in their specially equipped Electronic Car, the Sperry system has been completely tested and proved.

Sperry's Railroad Communications System makes possible *for the first time* clear, audible signals through tunnels, deep gorges, and the usual terrain and atmospheric conditions encountered in railroad service. No man-made

SPERRY GYROSCOPE COMPANY, INC.

Division of the Sperry Corporation

Leaders in the fields of • • • GYROSCOPICS • ELECTRONICS

system!

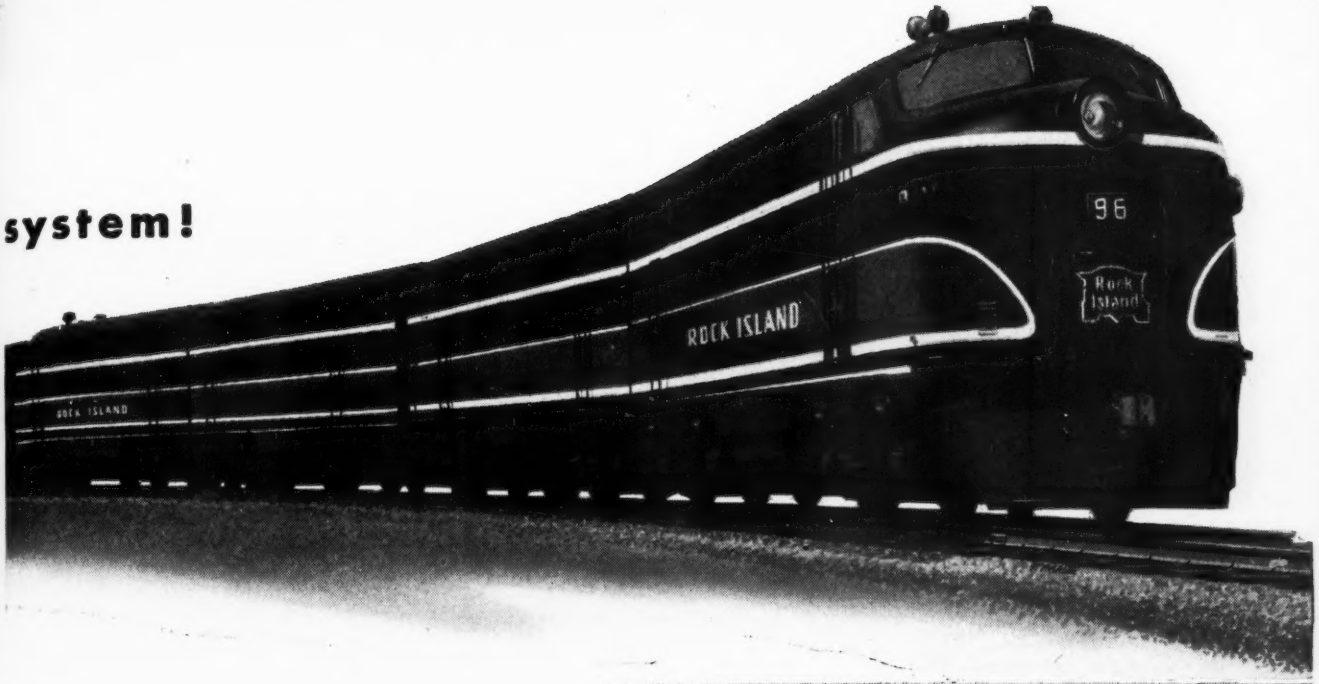

or atmospheric disturbance interferes with vital business!

Automatic relay stations, employing heretofore-restricted radar components that can be substituted for overhead land lines in treacherous storm areas, will link way stations and headquarters, and provide a continuous en route connection between trains and wayside points. A specially designed antenna provides any required degree of directional control.

Rock Island Lines, whose "sole purpose is to provide the finest in transportation," is being equipped with a Sperry Railroad Communications System.

If you would like our help in planning a complete radio communications system to expedite the handling of your freight and passenger traffic, write our Industrial Department for further information.

SPERRY RAILROAD COMMUNICATIONS SYSTEM

- **Microwave applications for the first time**
- **Designed especially for railroads**
- **Greater Range**
- **Increased Signal Strength**
- **FM Signal Audibility through any kind of interference**
- **Any degree of Directional Control**
- **Suitable for indoor and outdoor installations**
- **Available in both VHF and UHF**

GREAT NECK, N. Y. ★ LOS ANGELES · SAN FRANCISCO · SEATTLE · NEW ORLEANS · CLEVELAND · BROOKLYN · HONOLULU ★

RADAR · AUTOMATIC COMPUTATION · SERVO-MECHANISMS

GROUP SUBSCRIBERS SAVE UP TO $1.50 Each

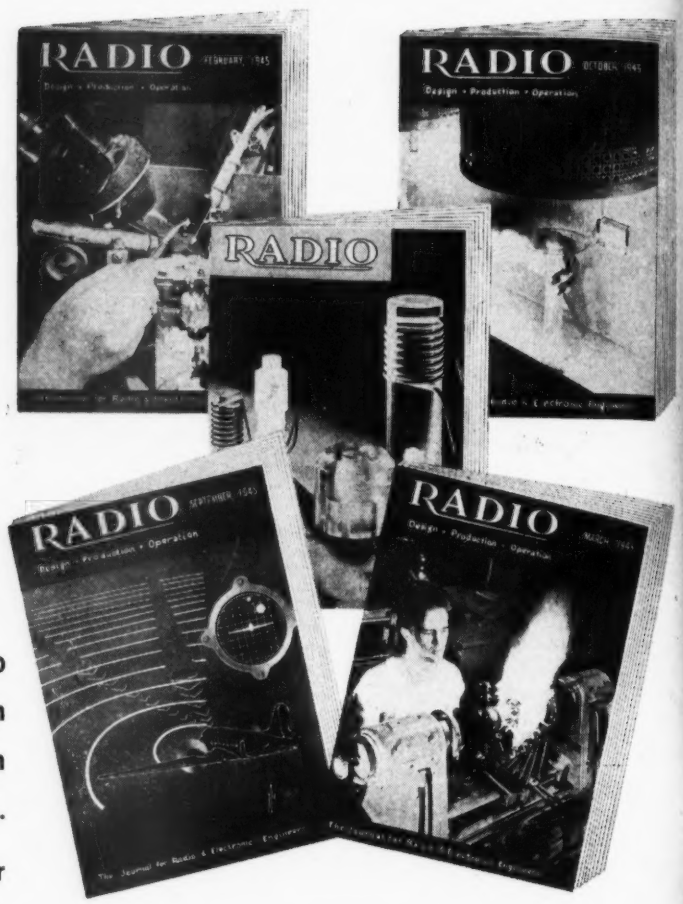

Form A Group Today!

You and your co-workers can now save up to half the regular cost of a RADIO subscription by using the Group Plan. The more men in a Group the more each saves, up to 50%.

Present subscriptions may be RENEWED or EXTENDED as part of a group.

The combination of exclusive, fine and timely articles plus this low-rate subscription offer makes RADIO a must-have publication. So fellows, form a Group today and send it to—

RADIO MAGAZINES, INC

342 MADISON AVENUE NEW YORK 17, N. Y.

TEAR OUT—MAIL TODAY!

RADIO MAGAZINES, INC.
342 Madison Ave., New York 17, N. Y.

Kindly enter the following subscription to RADIO Magazine. Remittance of $..... is enclosed. (1 to 6 subscriptions may be ordered on this form).

- ☐ One 1-year subscription $3.00
- ☐ Two 1-year subscriptions $5.00
- ☐ Three 1-year subscriptions $6.00
- ☐ Four 1-year subscriptions $7.00
- ☐ Five 1-year subscrdiptions $8.00

Groups of 6 or more subscriptions in the U.S.A. will be accepted at the rate of $1.50 each. For Canadian groups add $.50 to each subscription ordered.

PLEASE PRINT

Name .....
Address .....
.....
Position ..... Company .....
Name .....
Address .....
.....
Position ..... Company .....

Name .....
Address .....
.....
Position ..... Company .....
Name .....
Address .....
.....
Position ..... Company .....
Name .....
Address .....
.....
Position ..... Company .....
Name .....
Address .....
.....
Position ..... Company .....

NOTE: If you do not wish to tear out this order blank, print or type a list giving each subscriber's name, address, employer's name and their respective positions. Mail it in today!

With a proven background of honorable service on far-flung battlefronts around the world, Amphenol components—greatly improved by wartime experience and augmented in number, style and type—are now available to normal markets. Simplifying both buying and selling, this wider selection of high quality, tested items can be procured from one manufacturer. To know these popular Amphenol products better—write today for the new Condensed Catalog No. 72.

AMERICAN PHENOLIC CORPORATION
CHICAGO 50, ILLINOIS
In Canada • Amphenol Limited • Toronto

U.H.F. Cables and Connectors • Conduit • Cable Assemblies • Connectors (A-N, U.H.F., British) • Radio Parts • Plastics for Industry

TINY GIANT WITH A HISTORY

Long before the war, the men who design your Bell Telephone System were looking for an electron tube with frequency capabilities never before attained. With it, they could transmit wide bands of telephone messages — several hundred of them — simultaneously through coaxial cable—economically, and over long distances.

They developed a tube which set a new standard in broad-band, high-frequency amplification. So minute that its electrode system had to be inspected under a magnifying glass, the tube could amplify either the voices of 480 people talking at the same time, or the patterns of television. Long-distance, broad-band transmission became a commercial reality.

6AK5

Cross-section of Electrode System (five times actual size)

When war came, this tube excelled all others as an amplifier in certain military equipment. It then grew into the 6AK5, one of the great little tubes of the war. Besides producing 6AK5's in large quantities, the Western Electric responded to emergency needs of the Army and Navy by furnishing design specifications and production techniques to other manufacturers, of whom at least five reached quantity production. On every battlefront it helped our ships and planes to bring in radio signals.

Developing electron tubes of revolutionary design has been the steady job of Bell Laboratories scientists ever since they devised the first practical telephone amplifier over thirty years ago. Now tubes like the 6AK5 will help speed the living pictures of television, as well as hundreds of telephone conversations simultaneously over the coaxial and radio highways of the Bell Telephone System.

BELL TELEPHONE LABORATORIES

Exploring and inventing, devising and perfecting for continued improvements and economies in telephone service.

New!

A RELAY BY GUARDIAN with *Interchangeable Coils*

BUILT IN TWO PARTS

★Two basic parts — a coil assembly and a contact assembly — comprise this simple, yet versatile relay. The coil assembly consists of the coil and field piece. The contact assembly consists of switch blades, armature, return spring, and mounting bracket. The coil and contact assembly are easily aligned by two locator pins on the back end of the contact assembly which fit into two holes on the coil assembly. They are then rigidly held together with the two screws and lock washers. Assembly takes only a few seconds and requires no adjustment on factory built units.

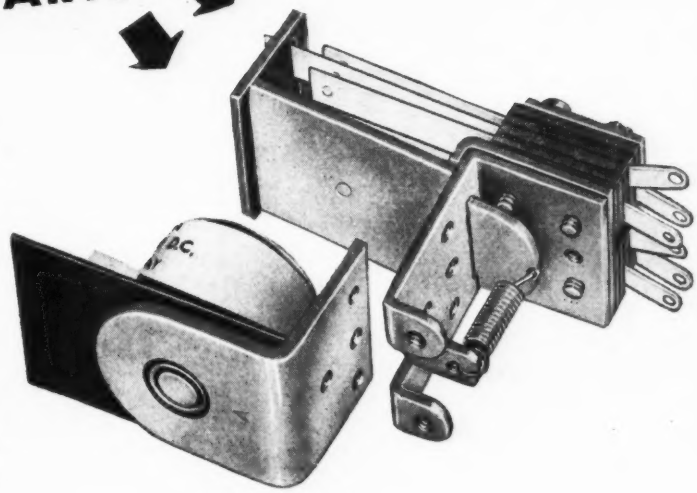

SERIES 200 RELAY

On Sale at Your nearest jobber NOW!

See it today! . . . this amazing new relay with interchangeable coils. See how you can operate it on any of nine different a-c or d-c voltages — simply by changing the coil. Ideal for experimenters, inventors, engineers.

TWO CONTACT ASSEMBLIES

The Series 200 is available with a single pole double throw, or a double pole double throw contact assembly. In addition, a set of Series 200 Contact Switch Parts, which you can buy separately, enables you to build dozens of other combinations. Instructions in each box.

NINE COIL ASSEMBLIES

Four a-c coils and five d-c coils are available. Interchangeability of coils enables you to operate the Series 200 relay on one voltage or current and change it over to operate on another type simply by changing coils.

Your jobber has this sensational new relay on sale now. Ask him about it. Or write for descriptive bulletin.

GUARDIAN ELECTRIC

1605 M W. WALNUT STREET CHICAGO 12, ILLINOIS

A COMPLETE LINE OF RELAYS SERVING AMERICAN INDUSTRY

Tests Prove Eimac Vacuum Condensers Far Superior in Operating Efficiency

Ability to handle high current at high frequencies is the true measure of the performance of a capacitor. A high peak voltage rating based on low frequency measurements does not tell the whole story.

The chart on this page shows the results of tests at 50 Mc. conducted on a standard Eimac VC50-32 Vacuum Capacitor and three other 50 mmfd. vacuum capacitors, designated on the chart by "A," "B" and "C." At just over 17 amps. (approximately 1525 peak volts across the capacitor) Unit "A" (rated at many times the applied voltage) became sufficiently heated to melt the solder on the end caps. Under this same test, the Eimac VC50-32 operates at less than 70°.

Eimac introduced the vacuum capacitor in 1938. It is interesting to note that the original Eimac capacitor design is still outperforming all comers. Such outstanding performance is typical of all Eimac products, which is one of the reasons why they are first choice of leading electronic engineers throughout the world.

1113

Follow the leaders to

Eimac REG. U.S. PAT. OFF. TUBES

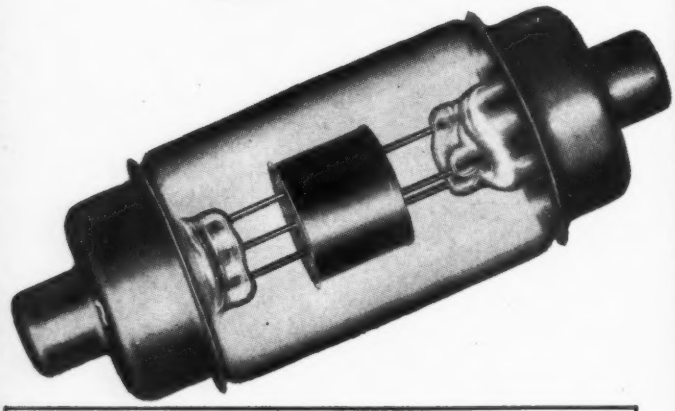

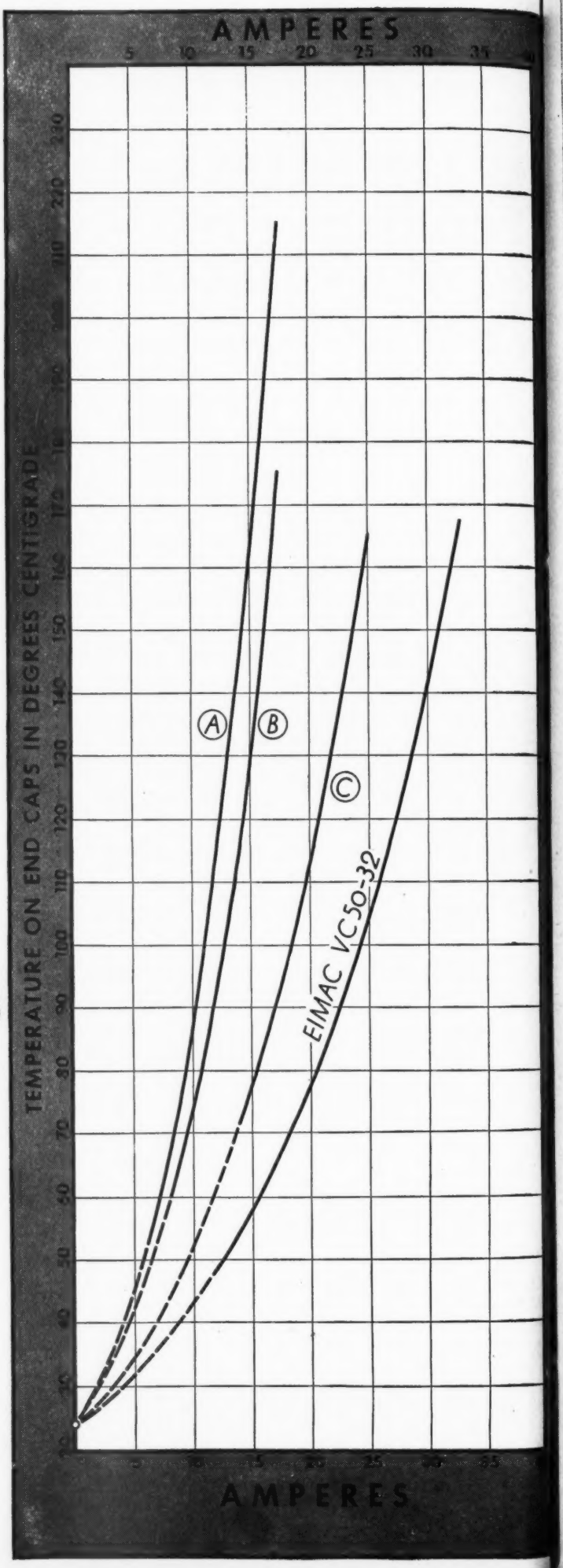

EIMAC VACUUM CAPACITOR TYPE VC50-32

General Characteristics

Mechanical:

Maximum Overall Dimensions

Length	6.531 inches
Diameter	2.281 inches

Electrical:

Maximum Peak Voltage	32,000 volts
Maximum RMS Current	28 amps.

EITEL-McCULLOUGH, INC., 1113 San Mateo Avenue, San Bruno, Calif.
Plants located at: San Bruno, California and Salt Lake City, Utah
Export Agents: Frazar & Hansen, 301 Clay St., San Francisco 11, Calif., U. S. A.

● In his persistent struggle up the heights to better performance and better quality in the electrical devices he designs the electronic engineer is now given vitally important assistance by Formica.

Recent Formica research in adapting new resins and glass fibre and glass mat materials to laminated insulation has produced some spectacular improvements in the behavior of insulation.

There are many types of these new grades—each developed to emphasize a particular quality. Among the advantages offered by some of them: very much greater strength to resist mechanical stress. High frequency insulating efficiency comparable with ceramics. Higher heat resistance. Better resistance to arching. Stability of dimensions and electrical qualities under high humidity. Fungus resistance because of absence of cellulose.

Ask about new grades Mf-66, FF-55, FF-10, FF-41.

FORMICA

THE FORMICA INSULATION CO.
4670 SPRING GROVE AVENUE
CINCINNATI 32, OHIO

JENSEN RADIO MANUFACTURING COMPANY • 6615 SOUTH LARAMIE AVENUE, CHICAGO 38, ILLINOIS
IN CANADA—COPPER WIRE PRODUCTS, LTD., 137 RONCESVALLES AVENUE, TORONTO

MOISTURE DANGER BEGINS

Protect Merchandise in Shipment and Storage with STERLING GEL

HUMIDITY-CONTROLLED PACKAGING WITH . . . STERLING GEL

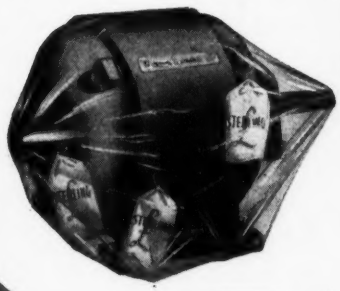

● The safe way to insure factory-fresh arrival of packaged merchandise is to keep relative humidity within the container below the danger point of 30%. Sterling Gel, used as recommended, absorbs all excess moisture, safeguards contents under extreme conditions, prevents rust, corrosion. Sterling Gel is inert, non-toxic, chemically inert. New, simplified processing and packaging methods make it available for postwar use at lower cost. Write for information now.

STERLING GEL

STERLING SILICA GEL COMPANY - STERLING, ILLINOIS

ONE QUICK CENTRAL SOURCE
for all Leading Makes of
TRANSFORMERS

STOCK ON HAND FOR IMMEDIATE DELIVERY

Thordarson
Stancor
Sola
General Radio
UTC
Superior
Merit Coil
Knight
General
Transformer
Acme
Pioneer Electric
Crest

Helpful BUYING GUIDE Available on Request Write for it!

It's simpler, faster to get your transformer needs from this one central source. Here, under one roof, are *all the leading makes, in all the wanted types:*

Power • Adjustable • Voltage Regulating
Step-up and Step-down • Plate and Filament
Audio Input • Interstage and Output • Modulation
Driver • Microphone, Line and Mixing Transformers
Filter and Swinging Chokes • Audio Reactors
Fluorescent Lighting Ballasts

Large and varied stocks are maintained for *rush service.* Close contact with manufacturers expedites procurement. This complete service saves time and work. That's why thousands call ALLIED First!

WRITE, WIRE, OR PHONE HAYMARKET 6800
for Everything in Radio and Electronics

ALLIED RADIO
CORPORATION
833 W. Jackson Blvd. • Dept. 14-L-5 • Chicago 7, Illinois

SUPPLIERS OF ELECTRONIC PARTS AND EQUIPMENT TO INDUSTRIAL AMERICA
Electronic Tubes, Rectifiers, Power Supplies, Intercommunicating Systems, Sound Systems, Photo-Cell Equipment, Batteries, Chargers, Converters, Generators, Supplies for Resistance Welders, Fuses, Test Instruments, Meters, Broadcast Station Equipment, Relays, Condensers, Capacitors, Resistors, Rheostats, Transformers, Switches, Coaxial Cable, Wire, Soldering Irons, Microphones, Speakers, Technical Books, etc.

TECHNICANA

CRYSTAL OSCILLATOR THEORY

★ The Q of a coil is given as $\omega L/R$, and its analog used to define the quality of a quartz crystal is $Q = \dfrac{\omega L_1}{R_1}$. The values refer to *Fig. 1A*, which is the equivalent circuit of a crystal at any frequency between its resonant frequency, ω_1, and its antiresonant frequency, ω_2.

This concept of Q is unsatisfactory for a study of crystal oscillators, and

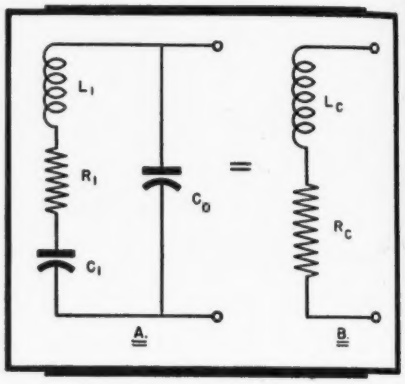

Figure 1

another term has been introduced. This term defines the quality of a crystal in its holder. The figure of merit $M = \dfrac{\omega L_1}{R_1} \cdot \dfrac{C_1}{C_0} = \dfrac{\theta}{r}$, where $r = C_0/C_1$. The capacitance C_0 between the terminals of the crystal holder is in shunt with the effective inductance, resistance, and capacitance of the crystal.

If the crystal, as viewed from the holder terminals, is given the equivalent circuit representation of *Fig. 1B*, then the effective Q is $\omega L_c/R_c$, but this circuit is equivalent only at the operating frequency, and the terms L_c and R_c are complex functions of the constants above. The paralleling capacitance is found in the oscillator circuit to which the crystal is attached.

A still more useful expression would describe crystal performance in an actual oscillator circuit, such as shown by *Fig. 2*. This is a generalized equivalent crystal circuit, containing a negative resistance ρ and a paralleling capacitance C_t, capable of sustained oscillations.

The new term, called the Performance Index, is based on the definition $PI = \dfrac{\omega L_c}{\omega C_t R_c}$, invoking the equivalent circuit values of *Fig. 1B*. In circuit units of *Fig. 2* this is given as

IN TUBE MANUFACTURE ALL SMALL DETAILS ARE LARGE TO *Federal*

From slender filament to anode block . . . *all* tube construction details, however small, are important to Federal. That is why this experienced and longtime manufacturer uses the illustrated high-magnification metallograph as part of its test equipment for checking raw material quality.

An example is the micro-photo inset. Here is shown oxide-free, high conductivity copper used for copper-to-glass seals . . . after the material has been reduced to a fine grain, non-porous structure through Federal's special metal-processing methods.

But whether copper, molybdenum or tungsten . . . they all are subjected to the same exclusive treatment and put through the same searching scrutiny . . . assurance that only the finest materials go to make up Federal tubes.

This exacting test is another good reason why Federal tubes are better tubes. Transmitting, rectifier, industrial power . . . they have a reputation that is deserved because they are *built to stay.*

Federal always *has* made better tubes.

FEDERAL TELEPHONE & RADIO FTR

Federal Telephone and Radio Corporation

AN IT&T ASSOCIATE

Newark 1, N. J.

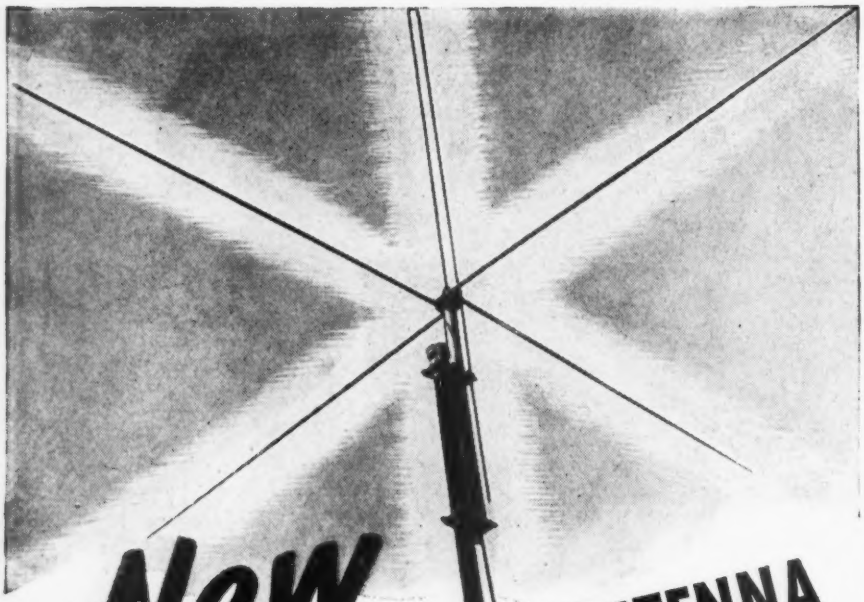

New FOLDED UNIPOLE ANTENNA

Another Example of ANDREW Ingenuity in Engineering

Concentrating on *electrical performance*, Andrew engineers have designed a unique Folded Unipole Antenna which—according to comparative tests—*easily outperforms other antennas at several times the price.*

Used for transmitting and receiving at frequencies from 30 to 40 MC and for powers up to 5,000 watts, this antenna has proved so successful that similar models for higher frequencies are now being designed.

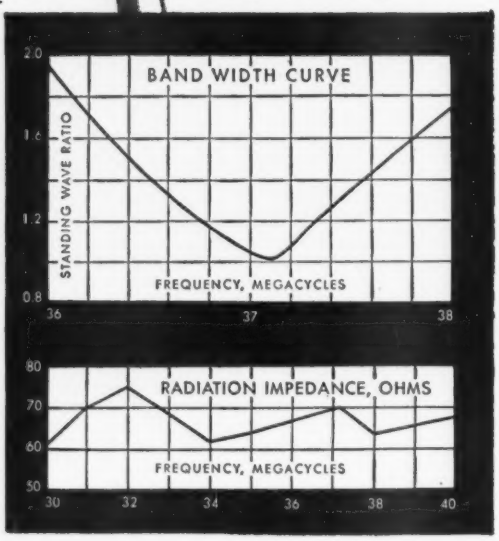

FEATURES:

- Light weight — only 15 pounds — simplifies installation.
- Lightning hazard minimized by grounded vertical element.
- "Slide trombone" calibration permits exact adjustment for any frequency between 30 and 40 MC, using only a wrench. Optimum performance for that frequency is guaranteed without "cut and try" methods.
- Proper termination of coaxial transmission line. Unlike other "70-ohm" antennas, the Folded Unipole actually provides a non-reactive impedance with a resistive component varying between 62 and 75 ohms (see lower curve).
- Excellent band width, ideal for FM (see upper curve).

Andrew Co. specializes in the solution of antenna problems. For designing, engineering and building of antenna equipment, consult Andrew Co.

ANDREW CO.
363 EAST 75th ST., CHICAGO 19, ILL.

ANDREW

WRITE FOR FULL INFORMATION

TECHNICANA

[*Continued from page* 16]

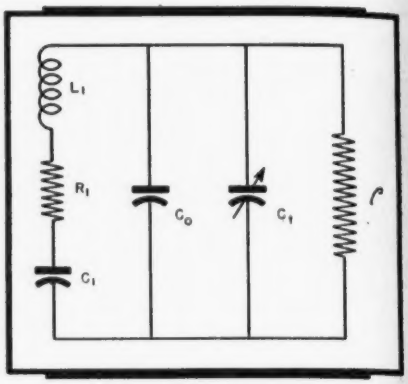

Figure 2

$$PI = \frac{M}{\omega C_0 (1 + \frac{C_1}{C_0})^2}$$, in which all quantities are measurable. This expression neglects the shunt resistive losses in the holder.

The need for a yardstick for measuring crystal performance which is more basic than the arbitrary determination of grid current activity has resulted in the appearance of two articles on this subject in the April, 1945, issue of the *Bell System Technical Journal.* The circuit theory is discussed by I. E. Fair in an article entitled "Piezoelectric Crystals in Oscillator Circuits". A second article on measurements is also reviewed in this column.

There are several methods by which crystal oscillator (as distinguished from crystal-control) circuits have been attacked. Each has been used to determine a specific type of information, generally of a qualitative nature. Mr. Fair has reviewed these methods in detail.

Frequency of operation has been tackled by the use of higher order differential equations, in which the differential coefficients are functions of the circuit elements. The conditions for sustained oscillations are also obtained.

These results, as well as conditions for oscillation and amplitude of oscillation, as determined by the use of complex function theory, are in general agreement with measured results. The vector method is also described.

The frequency stability coefficient of a crystal, defined as the rate of change of the reactance of the crystal, when placed in an oscillatory circuit, is shown to depend on the ratio C_0/C_1, of *Fig. 2.* This explains the relative stabilities of various cuts of crystals, and suggests how they can be adjusted. Additionally, the frequency stability of a crystal is di-

[*Continued on page* 25]

● The developments in radar, radio, television, electronic and electrical apparatus of all kinds made during the past four years will have tremendous influence on your future.

The unusual developments in transformer design, application and production,—the further confirmation of Jefferson Electric ability to produce transformers in great quantities with unsurpassed uniformity and accuracy,—will help insure the successful performance of your post-war products.

Look to your future, now, by consulting the Jefferson Electric staff of transformer specialists. JEFFERSON ELECTRIC COMPANY, Bellwood (Suburb of Chicago), Illinois. In Canada: Canadian Jefferson Electric Co., Ltd., 384 Pape Avenue, Toronto, Ont.

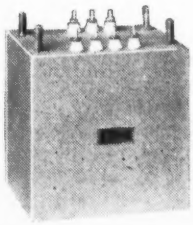

★ ★ ★

JEFFERSON ELECTRIC

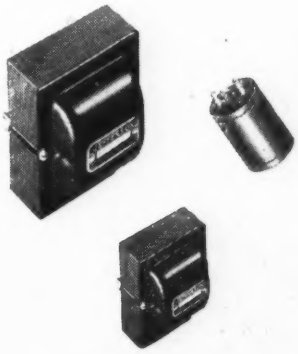

TRANSFORMERS

OHMITE
Rheostats and Resistors
IN PRODUCTION OF
Penicillin

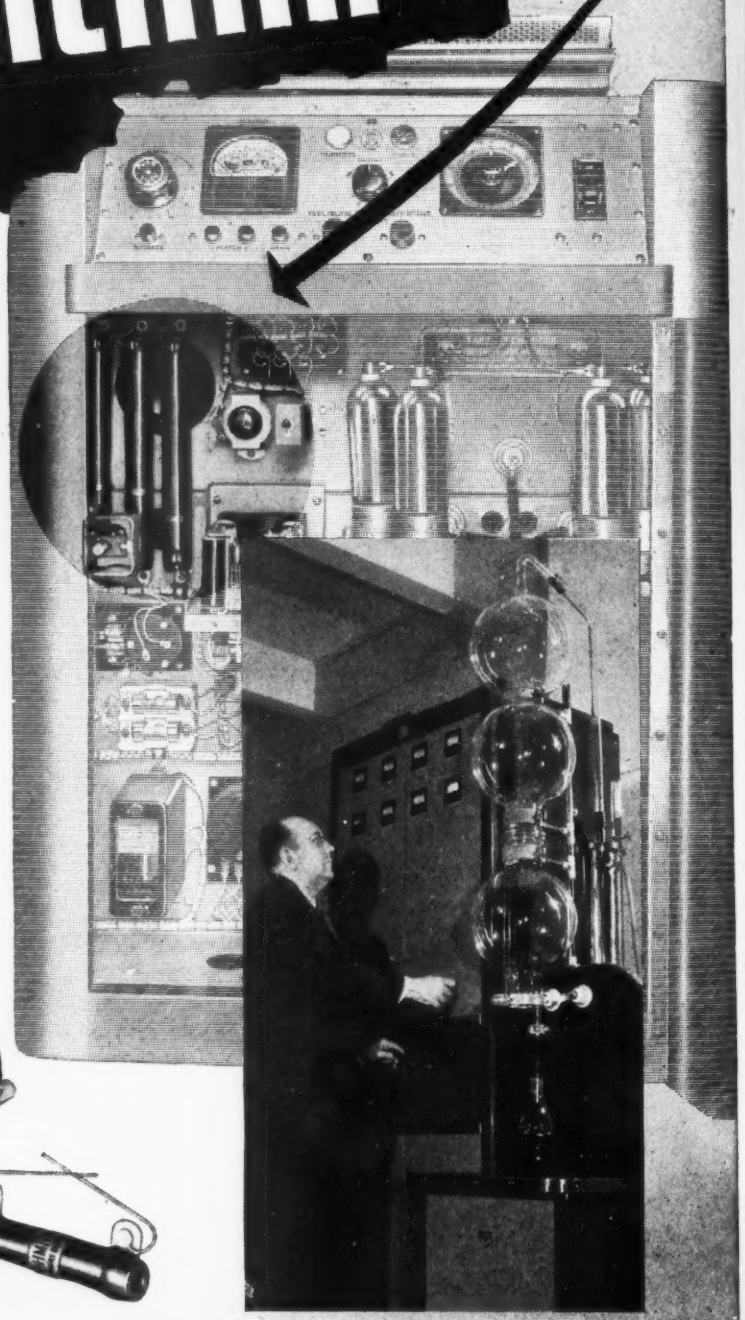

USED IN

ELECTRONIC POWER GENERATOR

that dries Penicillin 48 times faster

● A new RCA electronic system, using high frequency current for the bulk reduction of purified Penicillin, accomplishes in 30 minutes what formerly took 24 hours.

In the RCA Electronic Power Generator are six Ohmite resistors and two Ohmite rheostats. Circled in the photo above are a 200 watt regulator plate resistor, two 200 watt cathode bias resistors for the two power tubes, and a 50 watt rheostat used as a cathode balancer. Not visible in the photo are two 10 watt Brown Devil resistors used for voltage dropping in the pilot light circuits, one 10 watt Brown Devil in a time delay relay circuit, and a 50 watt rheostat used as the output power control.

The use of Ohmite products in such vital electronic equipment is further proof of their complete reliability.

OHMITE MANUFACTURING COMPANY
66 FLOURNOY STREET, CHICAGO 44, U. S. A.

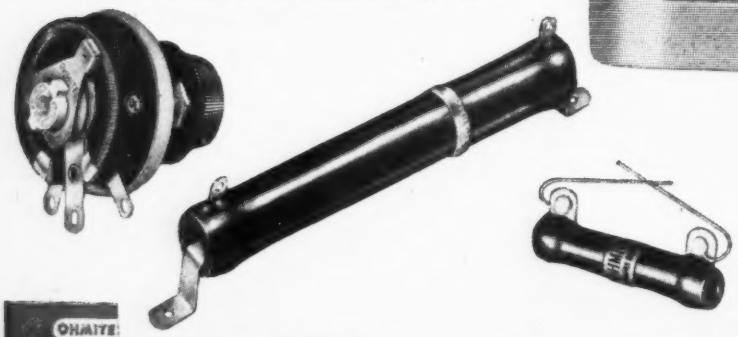

Write on company letterhead for Industrial Catalog and Engineering Manual No. 40. Address Ohmite Mfg. Co., 4866 Flournoy St., Chicago 44

***Be Right with* OHMITE**

RHEOSTATS • RESISTORS • TAP SWITCHES

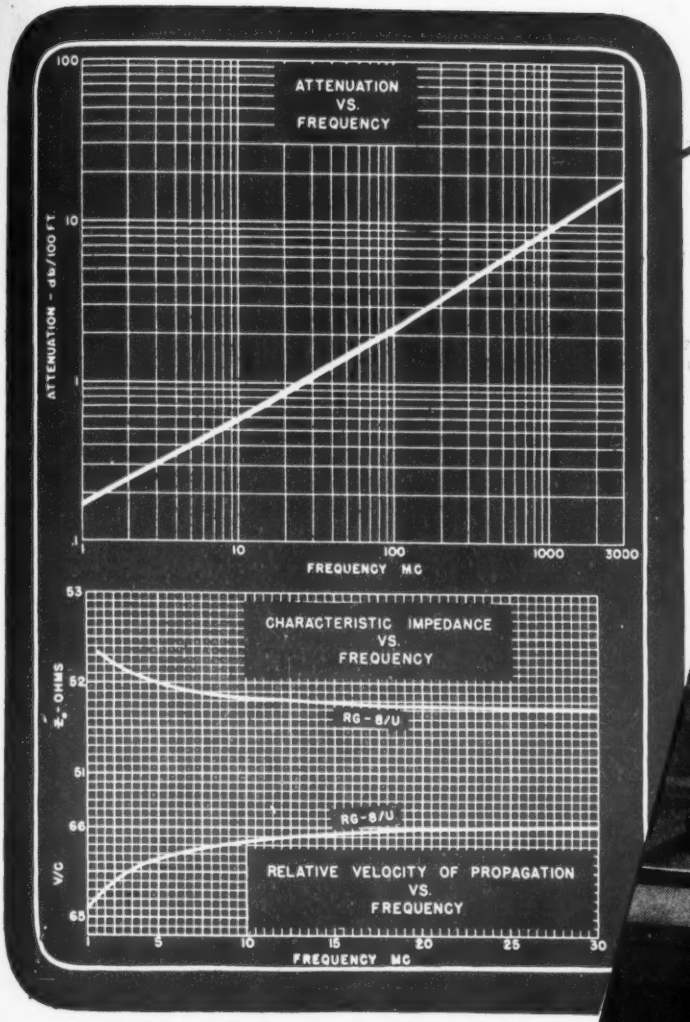

HERE'S PROOF...

How Federal H-F Cable Quality is Controlled by

Actual Test

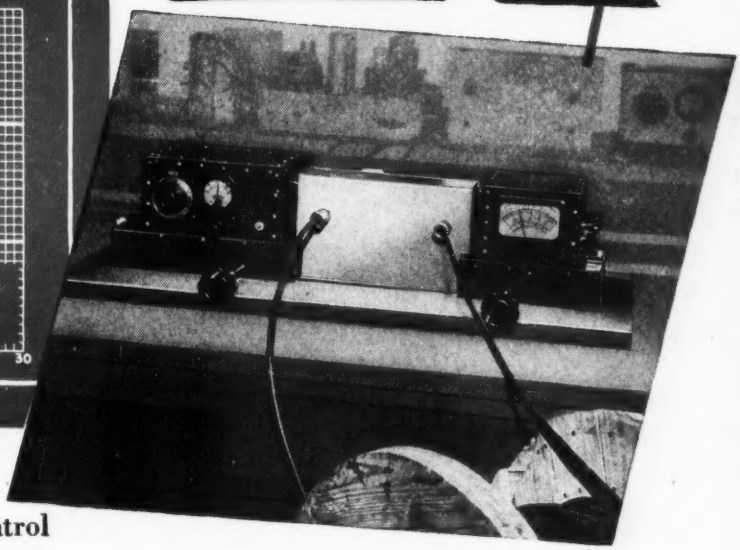

Precision engineering—plus careful control of all manufacturing operations . . . from raw materials to finished product—mean complete reproducibility in any given Intelin Cable type . . . and overall superior cables.

Take Intelin RG-8/U for instance . . . general purpose "work-horse" of high-frequency cables. Its characteristics are shown in curves obtained—not from nominal design values—but from thousands of actual measurements on cable samples, with special equipment developed and used exclusively by Federal's Intelin Product Line.

Intelin's Attenuation Meter is an example of such equipment. It's a precision instrument . . . accurate to .1 db . . . developed by Intelin to provide a constant check on production quality and "measured" data for the equipment designer.

For additional information regarding Intelin RG-8/U . . . write *today* for Report E-53 —and for cable you can count on . . . *always* specify INTELIN.

FEDERAL TELEPHONE & RADIO FTR

Federal Telephone and Radio Corporation

Newark 1, N. J.

Quiet

Efficient—reliable—above all, *QUIET*—
that's the Ballentine Phonograph Drive.
Basic refinements in design, *precision dynamic balance*, the most advanced manufacturing technique and equipment make the Ballentine Phonograph Motor unequalled for low background noise or rumble.
Send for descriptive bulletin.

RUSSELL ELECTRIC COMPANY
370 WEST HURON ST., CHICAGO 10, ILL.
Manufacturers of
BALLENTINE PHONOGRAPH DRIVE

Tops in the Field

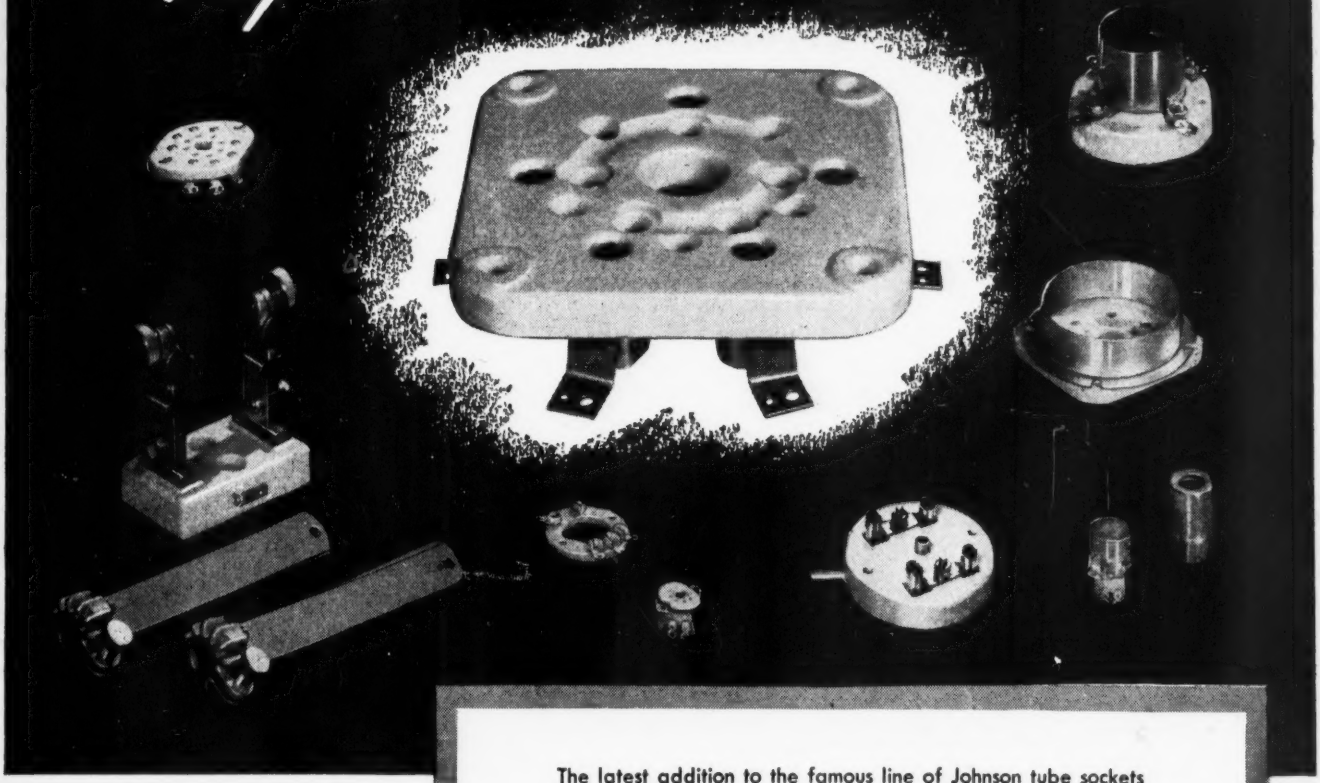

The latest addition to the famous line of Johnson tube sockets is the 275, Giant Five Pin tube socket with all the oustanding features which have made other Johnson sockets superior. A special feature of the 275 is the provision that has been made to allow forced ventilation from below the chassis, as required for the recently announced Eimac 4-125A and 4-250A. This socket may also be used for other Giant Five Pin tubes when a wafer type socket is desired.

Johnson sockets are engineered to meet the most exacting requirements of industrial, commercial broadcast and "ham" applications. For more than 20 years Johnson engineers have designed, and Johnson production lines have produced, transmitting components known throughout the industry as tops in the field. With this background and the close association with tube manufacturers, Johnson is continually leading the way with tube sockets designed to meet the rigid requirements of present day electronic circuits and equipment.

If you have a special tube socket problem, write Johnson, today.

Write for

TUBE SOCKET GUIDE

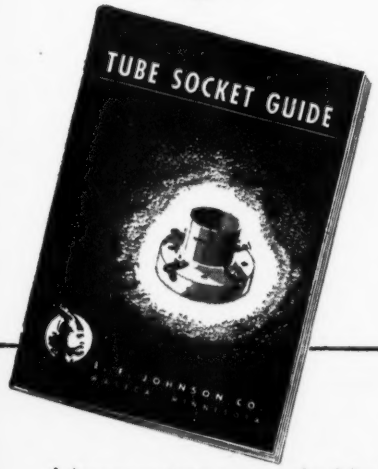

Johnson sockets are stocked by leading radio-electronic parts jobbers.

JOHNSON

a famous name in Radio

E. F. JOHNSON COMPANY • WASECA • MINNESOTA

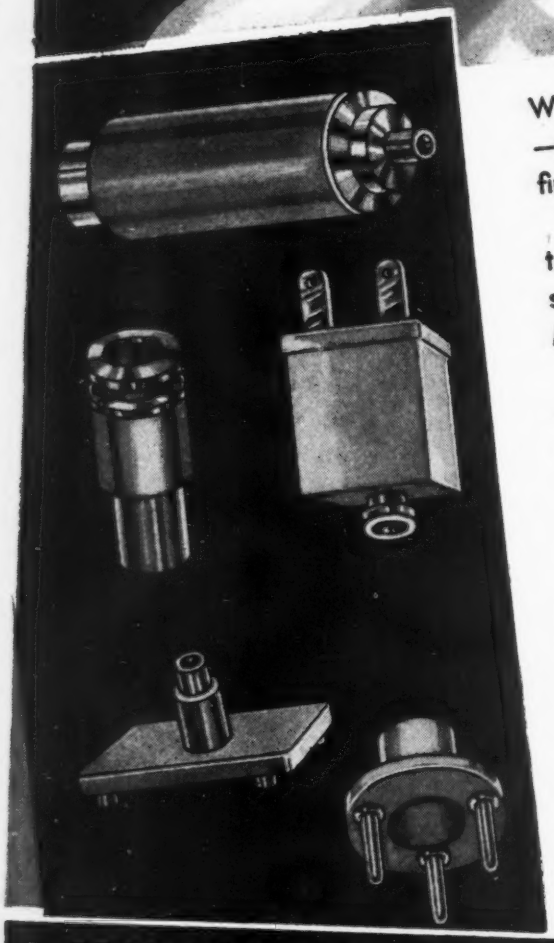

Where the need is for the most modern insulating material —of high dielectric strength and very low loss factor, the first thought of design engineers is MYCALEX.

In applications requiring the incorporation of metal electrodes or inserts in the closest possible union with the insulation, the answer is new, advanced precision-molded MYCALEX 410.

Important new advancements in technique and process —exclusive with MYCALEX CORPORATION OF AMERICA— now make possible the nearest approach to theoretical "perfection" in bonding or sealing combinations of MYCALEX and metals into completely integrated units.

We have the special facilities, the pioneering "know-how" and the plant capacity to mold your MYCALEX-METAL component parts—with a totally new (and heretofore impossible) degree of precision. The finished product will meet the most exacting electrical and mechanical requirements.* Ask us for complete details. Tell us your product needs.

*Withstands temperatures above 400°—Inorganic, no carbonization—Impervious to moisture and gases—Close tolerances.

SINCE 1919
MYCALEX
THE INSULATOR
TRADE MARK REG U S PAT OFF.

MYCALEX CORPORATION OF AMERICA

"Owners of 'MYCALEX' Patents"

Plant and General Offices, CLIFTON, N. J. *Executive Offices,* 30 ROCKEFELLER PLAZA, NEW YORK 20, N.Y.

TECHNICANA

[Continued from page 18]

rectly related to the figure of merit, M, and determines the maximum M that can be obtained.

The Performance Index of the crystal is based on the negative resistance method of analysis, from which the condition for oscillation is $\omega C_t \rho \leq \frac{\omega L_c}{R_c}$. This refers to *Fig. 2*. Since the right-hand side of this expression must exceed the left-hand side for oscillations to start, the right-hand side is considered a measure of the crystal quality, and is defined as the Performance Index.

If Performance Index is plotted against C_t/C_o, the latter will decrease exponentially with PI. When $C_t = 0$, maximum performance can be expected.

Again, when R_c, the effective crystal resistance, decreases, performance increases.

The $PI - I_g$ circuit characteristics indicates that when I_g saturation occurs, no further improvement in circuit performance can be expected by changing crystals. By using the Performance Index as a guide, oscillator and crystal characteristics can be examined independently.

It is suggested that crystal activity, as a standard of measurement of crystal quality, be gradually discontinued in favor of the new Performance Index. This will eliminate the need for crystal manufacturers to maintain models of all oscillators for which they intend to make crystals.

Additionally, this proposal should induce circuit engineers to devise standards of quality for oscillator circuits in general, and to correlate these standards with crystal performance for a better overall understanding of crystal circuit operation.

SOUND DISTRIBUTOR

★ In a recent paper, Christian A. Volf, Director of Research for the Robinson-Houchin Optical Co., Columbus, Ohio, discusses a newly developed combination directional and non-directional sound distributor.

Herewith are some of the salient points of Mr. Volf's discussion.

"The present illustrated directional and non-directional resonator and sound distributor represents well-known acoustical principles and disobeys none of the acoustical laws. The relationship of air column, mass and quality of material as well as form has been fully considered as illustrated in *Fig. 3* from which all structural details can be observed. The dimension constitutes a 24" cubicle air column, the weight mass of this small chamber without any hardware or

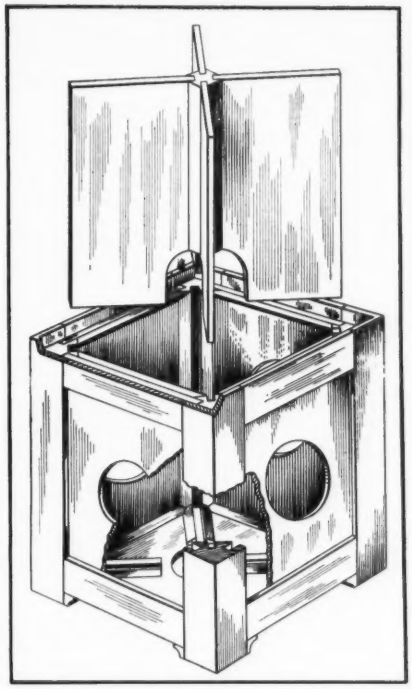

Figure 3

loudspeaker units installed is 90 pounds. In comparing this weight mass with any other empty reproducing chamber of similar size, it will be found three to four times heavier.

"Five loudspeaker units of various dimensions may be installed within the 24" cubicle space and a four-sectional dividing section divides into the grooved segments, thereby separating the back of each unit from the other. The resonating box contains no other electrical equipment. The total unit is preferably suspended from a ceiling height to a level most suitable and in proportion to the total ceiling height or, when employed in connection with motion pic-

Figure 4

AN AMPLIFIED ANSWER TO AN ENGINEER'S

DREAM

PARTICULARLY PERFECTED FOR PRE-EMPHASIZED DISC RECORDING

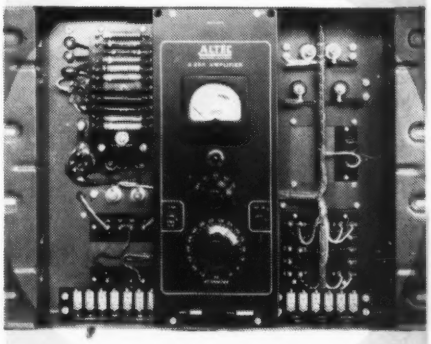

A new Altec Lansing 35 watt, 65 db gain, premium quality A255 amplifier, with plenty of reserve power and flat over the entire frequency range, has been particularly perfected for the requirements of high power at high frequencies as required for pre-emphasized disc recording. Curves, specifications and performance data will be sent immediately upon request. Refer to Altec Lansing's new A255, 35 watt, amplifier.

ALTEC LANSING CORPORATION

1210 TAFT BLDG., HOLLYWOOD 28, CALIF.
250 WEST 57 STREET, NEW YORK 19, N. Y.
IN CANADA: NORTHERN ELECTRIC CO

RADIO PARTS
ELECTRONIC EQUIPMENT

Mail Coupon NOW for CONCORD Victory Clearance Flyer—FREE!

Ready now! 32 Bargain-packed pages listing thousands of standard-make, top-quality radio parts and electronic supplies—now available without priority at low VICTORY CLEARANCE prices. The values listed at the left are typical of the important savings offered in Meters, Condensers, Transformers, Resistors, Controls, Switches, Relays, Test Equipment, Generators, Microphones, Tools, and hundreds of Repair, Replacement, and Accessory Parts. On special requirements, Concord experts are ready to help you in expediting and speeding action on essential needs.

Order Today for Shipment Tomorrow from CHICAGO or ATLANTA

Huge stocks in *two* convenient warehouses—one in CHICAGO and one in ATLANTA—are ready to supply you quickly with needed parts of dependable, nationally-known quality—and at VICTORY CLEARANCE prices that mean real savings. Mail the coupon below NOW for your FREE copy of CONCORD'S VICTORY CLEARANCE Flyer.

Check These Typical CONCORD VALUES!

D. C. Milliammeters
2½" flange mtg. type. Metal case dull black finish. G. E. 0-200 M. A. C10650.
Specially Priced $4.95

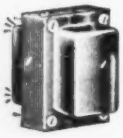

Plate Power Transformer
Pri. tapped at 115, 117 and 120 V.A.C. Sec. output 850 V. at 200 ma. c. t. 4½" L x 3¾" W x 3⅞ W H. 5B5035.
Your cost $4.29

Dry Electrolytic Condenser
Hermetically sealed. Size, 1⅜" x 3". Can negative. Cap.: 40 mfd. at 475 volts; 15 mfd at 350 volts; 15 mfd at 150 volts; 20 mfd at 25 volts. 5B-3161
Each 59¢

Output Transformer
Hermetically sealed. Six studs, 1, 2, and 3 are pri. 4, 5, and 6 the sec. pri. ind. at 5 V. 1000 cy.: .20 H. Ratio sec. to pri. 3. 0 2: 1. size: 3¼" x 2 11/16" 5B-5045
Your cost $1.95

Mobile High Voltage Power Unit

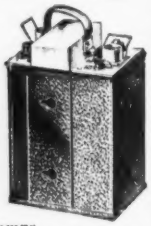

Input 12 V at 10 amps. Output consists of two voltage ranges: (1) 275 at 110 ma. (2) 500 at 50 ma. 5B9518
Your cost $39.50

300 Watt Rheostat
Wire wound. Vitreous enameled. Cast aluminum base. 6" dia. 2⅛ 2 deep. 1400 ohms. 5B9517.
Your cost $3.95

CONCORD RADIO CORP.
LAFAYETTE RADIO CORPORATION
CHICAGO 7, ILL. 901 W. Jackson Blvd. ★ ★ ATLANTA 3, GA. 265 Peachtree Street

CONCORD RADIO CORP.
901 W. Jackson Blvd.
Dept. F-115. Chicago 7, Ill.

Please RUSH FREE copy of CONCORD'S new 32 page VICTORY CLEARANCE Flyer.

Name .....
Address .....
City ..... State .....

TECHNICANA

[*Continued from page 25*]

tures, is placed either directly above the screen or one unit on each side of the screen—depending on the size of the theater proper.

"The same unit may also be employed as a console cabinet upon which may rest a radio and public address amplifying system as illustrated in *Fig. 4*. In this way it forms a complete professional sound recording unit.

"A six-way switch is built into the amplifier section through which each independent unit may be controlled separately or all five jointly. In substance, it may well be defined as a five-dimensional sound system since each loudspeaker unit is sharply directional and yet, when all five units are operating, it introduces no directional characteristics whatsoever. This is particularly true when it has been suspended from the ceiling. One

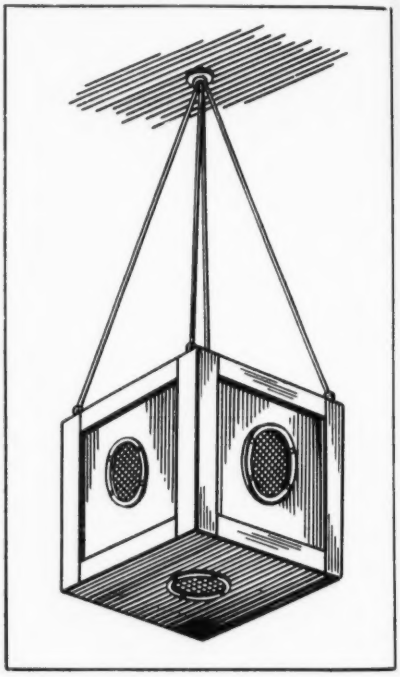

Resonator suspended from ceiling

becomes aware of a totally new sound effect—namely that of quantum or mass sound, which theoretically would be the same as the fifth dimension. Helmholtz (in "Sensations of Tone") gave much consideration to the combinational tones in music and it is precisely these qualities that are brought out. Actual tests were made of the sound values and it has been proven beyond a question of doubt that there is no predominance of higher or lower frequency response from any point within the enclosure but an absolute pure blending of the tonal response from the various units when measurements are taken at a reasonable distance from the sound source.

"From a practical aspect, the resona-

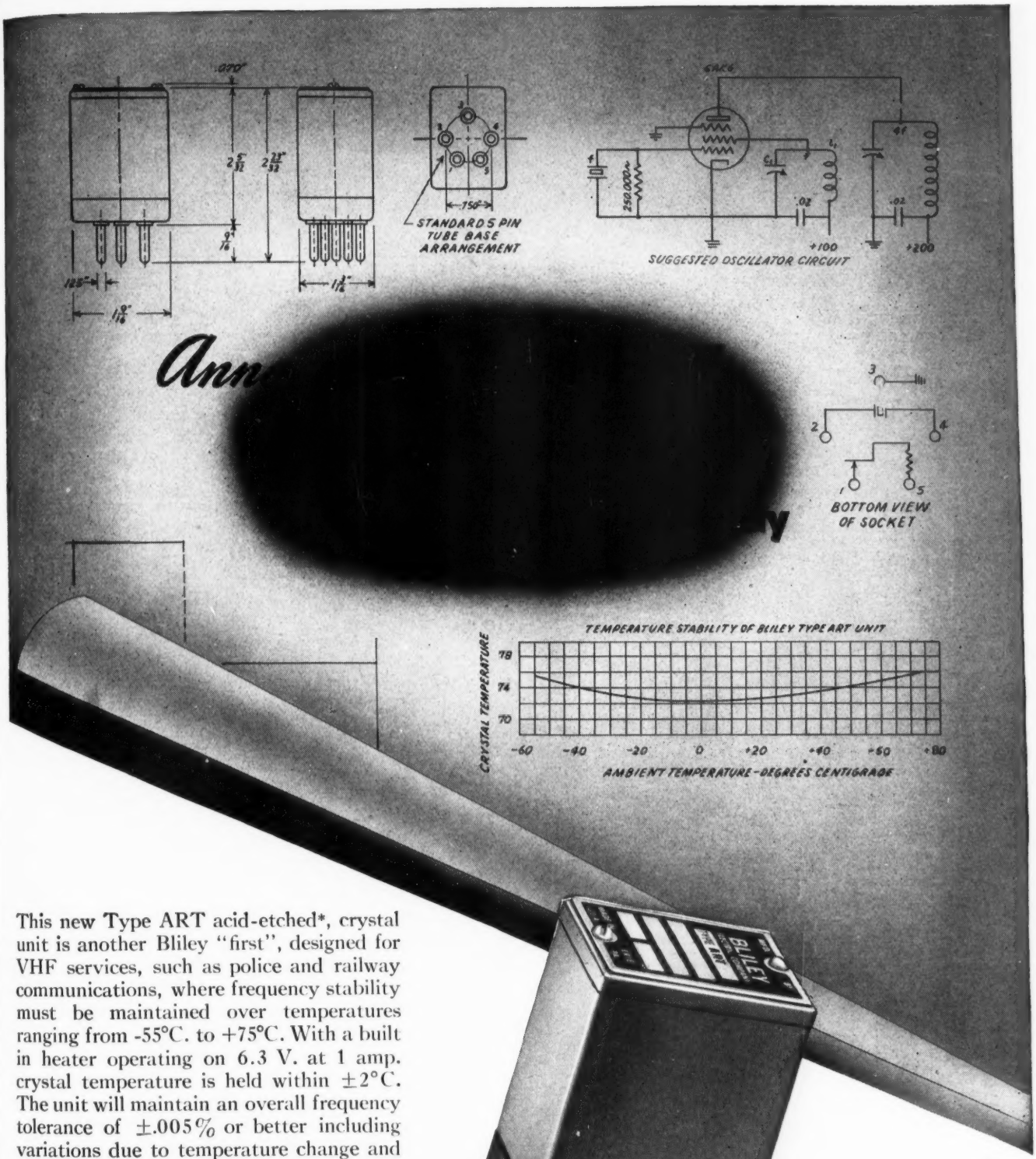

This new Type ART acid-etched*, crystal unit is another Bliley "first", designed for VHF services, such as police and railway communications, where frequency stability must be maintained over temperatures ranging from -55°C. to +75°C. With a built in heater operating on 6.3 V. at 1 amp. crystal temperature is held within ±2°C. The unit will maintain an overall frequency tolerance of ±.005% or better including variations due to temperature change and tolerances required for crystal production. This rugged, compact crystal assembly is available for any frequency between 3500 kc. and 11,000kc.

A schematic diagram of the oscillator circuit and tolerance to be maintained should accompany requests for quotations. See above design for efficient frequency multiplication.

Acid etching quartz crystals to frequency is a patented Bliley process.

Radio Engineers — write for temporary Bulletin RA-25

Bliley CRYSTALS

BLILEY ELECTRIC COMPANY • UNION STATION BUILDING, ERIE, PENNSYLVANIA

Face the Facts . . .

You Must Train Now to Step Ahead of Competition Into A Good-Paying Job in Radio-Electronics

— or be left behind because you lack the understanding of new electronic techniques

CREI home-study courses are for professional radiomen only and this CREI message is for those who are not afraid to face the facts! The bars are down on radio-electronics progress! You are facing a completely new era in the radio-electronics world. The war-restricted curtains of secrecy have been pulled aside, revealing each day momentous, revolutionary applications of new radio-electronic principles and theories, and their complicated circuits, equipment, individual parts, etc.

No matter what your past radio-electronics experience has been, no matter what your training, *you* must start anew to add to your store of radio-electronics knowledge. *You must keep pace* with the new developments and ahead of competition if you expect to get ahead in this *new* world of radio-electronics—or even maintain your present position in the field.

How much do you know about U.H.F. Circuits, Cavity Resonators, Wave Guides, Klystron, Magnetron and other tubes? All these revolve largely around U. H. F. applications. And here is where CREI training can help you. In our proved home study course, you learn not only *how* . . . but *why!* Easy-to-read-and-understand lessons are provided well in advance, and each student has his personal instructor who corrects, criticizes and offers suggestions on each lesson examination.

Let CREI train you now and trade that "screwdriver" for a slide rule. Do something about increasing your technical ability and advance to the better-paying radio jobs that offer security and opportunity. The facts are in the free booklet. Send for it today.

WRITE FOR FREE 36-PAGE BOOKLET

"Your Opportunity in the New World of Electronics"

If you have had professional or amateur radio experience and want to make more money, let us prove to you we have something you need to qualify for a better radio job. To help us intelligently answer your inquiry — PLEASE STATE BRIEFLY YOUR BACKGROUND OF EXPERIENCE, EDUCATION AND PRESENT POSITION.

CAPITOL RADIO ENGINEERING INSTITUTE

Home Study Courses in Practical Radio-Electronics
Engineering for Professional Self-Improvement

Dept. RA-11, 3224 - 16th Street, N.W., Washington 10, D. C.

Contractors to U. S. Navy—U. S. Coast Guard—Canadian Broadcasting Corp.
Producers of Well-trained Technical Radiomen for Industry.

Member: NATIONAL COUNCIL OF TECHNICAL SCHOOLS

TECHNICANA

[*Continued from page 26*]

tor offers not alone a superior acoustical result but simplifies a sound installation in large auditoriums or theaters because it requires only one outlet for each unit and, as the distribution of sound may be considered perfect, it can readily replace an average installation where 25 to 50 loudspeaker units are generally employed toward the same end.

"In view of the structural simplicity, there is naturally little technical information necessary; the illustrations may be considered self-explanatory."

BOOK REVIEWS

THE ELECTROLYTIC CAPACITOR, by Alexander M. Georgiev, published by Murray Hill Books Inc., 232 Madison Avenue, New York 16, N. Y., 179 pages, cloth binding, $3.00.

The origin of the electrolytic capacitor can be traced to the latter part of the nineteenth century when Wheatstone discovered that a film can be formed on aluminum electrochemically which will exhibit uni-directional electrical conductance. One of the early attempted applications of the electrolytic capacitor was in conjunction with the starting of single phase induction motors. Later it was used for power factor correction in a-c power circuits. Extensive use of the electrolytic capacitor came with the advent of radio and electronics in the early 1920's when it was used in filter circuits for supplying rectified alternating current biasing voltages. The first electrolytic capacitors were of the wet type and were polarized. A few years later, dry type electrolytic capacitors of high capacitance and low voltage rating were introduced for use in A-battery eliminators. About 1929 the high voltage dry electrolytic capacitor was introduced and soon found extensive application in radio receiving equipment.

This book is one of only three on the subject of electrolytic capacitors. Since there has been a certain amount of secrecy surrounding the process of producing this type of device, as well as a noticeable lack of technical literature on the subject, this book should prove of considerable interest to many engineers. It contains 21 chapters each having 5 or 6 pages of text, and is profusely illustrated. The author has chosen to lead the reader through general capacitor data, comparison of capacitor types, electrolytic capacitor components, parts processing, testing, manufacturing difficulties, design, general uses of electro-

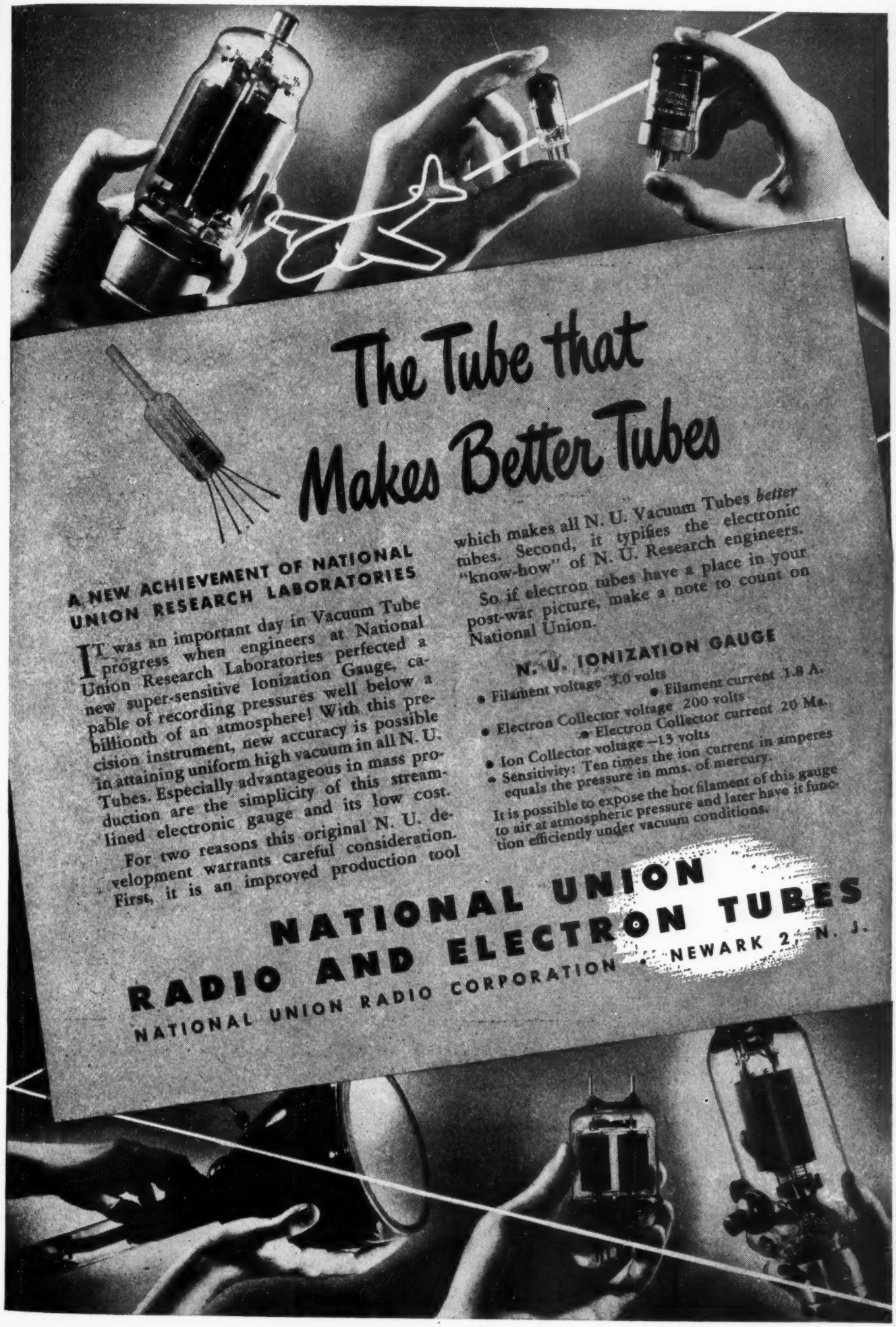
The Tube that Makes Better Tubes
A NEW ACHIEVEMENT OF NATIONAL UNION RESEARCH LABORATORIES
IT was an important day in Vacuum Tube progress when engineers at National Union Research Laboratories perfected a new super-sensitive Ionization Gauge, capable of recording pressures well below a billionth of an atmosphere! With this precision instrument, new accuracy is possible in attaining uniform high vacuum in all N. U. Tubes. Especially advantageous in mass production are the simplicity of this streamlined electronic gauge and its low cost.
For two reasons this original N. U. development warrants careful consideration. First, it is an improved production tool which makes all N. U. Vacuum Tubes better tubes. Second, it typifies the electronic "know-how" of N. U. Research engineers.
So if electron tubes have a place in your post-war picture, make a note to count on National Union.
N. U. IONIZATION GAUGE
• Filament voltage 3.0 volts
• Filament current 1.8 A.
• Electron Collector voltage 200 volts
• Electron Collector current 20 Ma.
• Ion Collector voltage −13 volts
• Sensitivity: Ten times the ion current in amperes equals the pressure in mms. of mercury.
It is possible to expose the hot filament of this gauge to air at atmospheric pressure and later have it function efficiently under vacuum conditions.
NATIONAL UNION
RADIO AND ELECTRON TUBES
NATIONAL UNION RADIO CORPORATION • NEWARK 2, N. J.

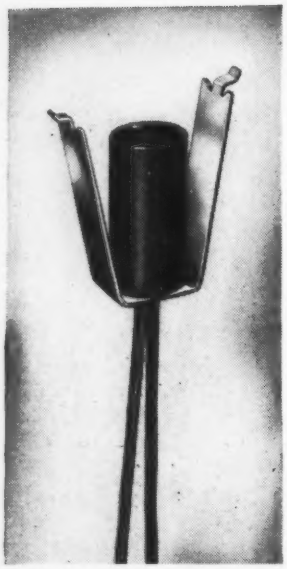

THE NO. 527F TYPE

Check the Quality Features of the Drake No. 500 Series

- √ Time tested — *Millions have been used since March 1940!*
- √ Available in *any* quantity with *any* type of bracket.
- √ Sturdy Bakelite Molded insulating casting shields socket from outside contact.
- √ Center contact lead wire mechanically secured before soldering.
- √ Both lead wires withstand over 25 lbs. tension.
- √ Rounded eyelet edges prevent cut or frayed lead wire insulation.
- √ 1000 volts minimum breakdown voltage between contacts and to ground.
- √ Casting mechanically secured to bracket —can't turn.
- √ Socket mechanically secured within casting—can't turn or be pulled out.
- √ Center contact secured within socket—contact won't protrude when lamp removed.

Consider this better underwriters' approved DRAKE dial light assembly for war or peace-time products. Lead wire 2¾ in. to 4 ft. Prompt shipment in any quantity assured. May we send samples of our newest catalog?

SOCKET AND JEWEL LIGHT ASSEMBLIES

DRAKE

DRAKE MANUFACTURING CO.

1713 WEST HUBBARD ST., CHICAGO 22, U.S.A.

Toroids.. by DX

Doughnut Coils for electronic and telephone purposes. High Permeability Cores are hydrogen annealed and heat treated by a special process developed by DX engineers. Send us your "specs" today—ample production facilities for immediate delivery.

DX RADIO PRODUCTS CO.

GENERAL OFFICES 1200 N. CLAREMONT AVE., CHICAGO 22, ILL., U.S.A.

DX COILS "the heart of a good receiver"

lytic capacitors and the common limitations of the device. Several of the known theories on the nature of the dielectric film are discussed briefly. The book is directed particularly to engineers and technicians engaged in the manufacture, use, and repair of electrolytic capacitors and those interested in the design of apparatus using them. This group of readers as well as others who desire a general knowledge of electrolytic capacitors will find that the book thoroughly covers most of the general information which they require, and will point out simple procedures for the determination of quality and characteristics of the device.

The author is to be particularly congratulated on the glossary and bibliographical data included in the book. The latter is very complete and contains a large number of patent references which should be helpful to specialists in this field.

The text is written in an interesting and easily readable style. It is practical and up-to-date, and appears to be free of errors. It is the best text on this topic that has come to this reviewer's attention and is recommended to anyone interested in the subject of electrolytic capacitors.

PULSED LINEAR NETWORKS, by Ernest Frank, published by McGraw-Hill Book Co., 330 West 42nd Street, New York 18, N. Y., 267 pages, cloth binding, $3.00.

This book is intended for a first course in transient phenomena for college students. It is essentially mathematical in character and requires a working knowledge of differential equations. The author states in the preface that the principal things to be gained through a study of the text are:

1. A feeling for the distinction between transient and steady state network behavior
2. An understanding of the underlying factors governing the transient behavior of networks
3. A familiarity with the interpretation of mathematical results in terms of the phenomena that they describe
4. A method of analysis which is applicable to a variety of networks and which does not involve unfamiliar mathematical concepts
5. A realization of the limitations of the classical method and an appreciation of the need for a more powerful method

There are nine chapters and an appendix containing tables of exponentials and hyperbolic functions. At the end of each chapter appears a series of exercises for the student intended to illustrate

[*Continued on page* 68]

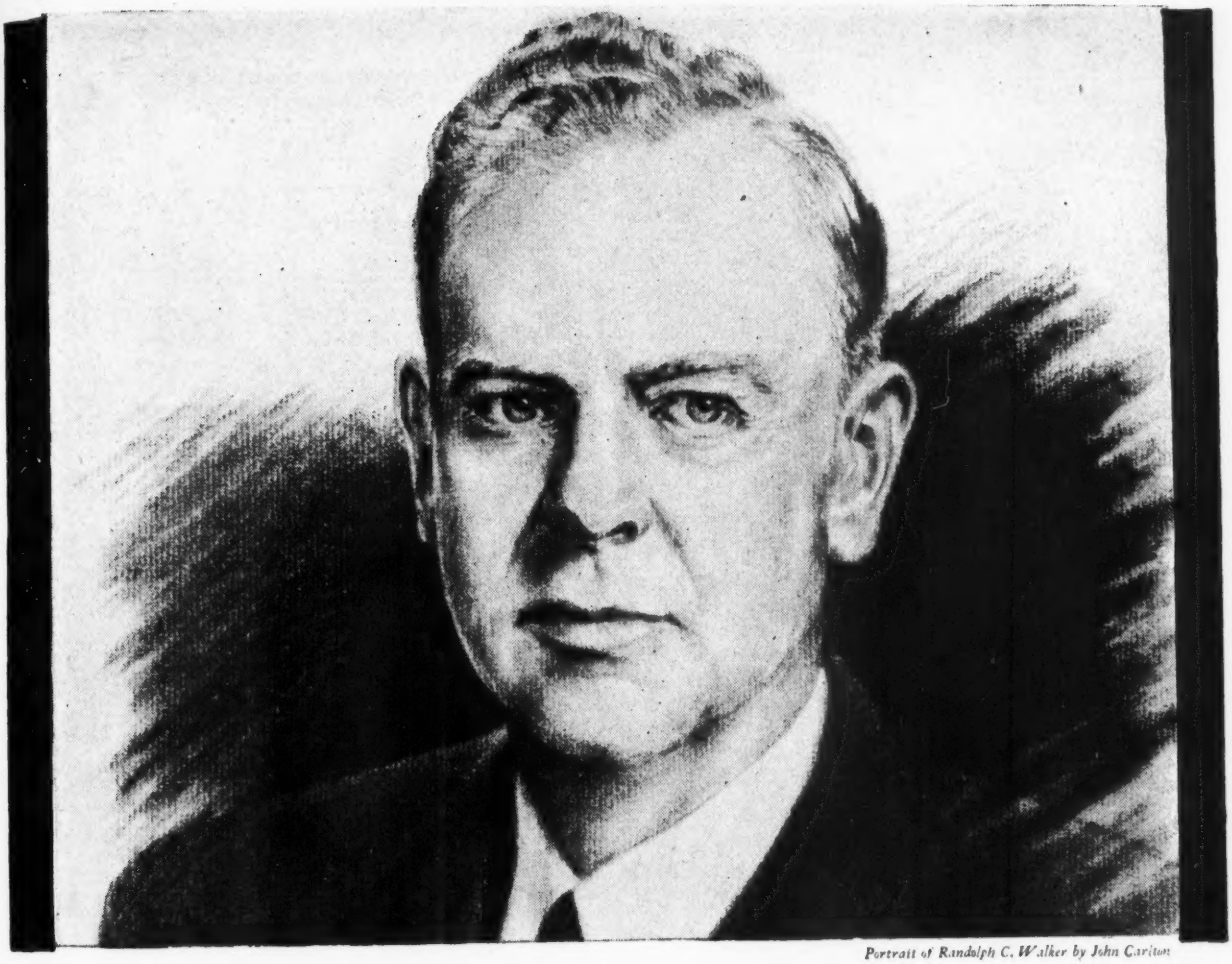

Portrait of Randolph C. Walker by John Carlton

Engineers of Victory

NOW SERVE MEN AT PEACE

The creative engineering which armed our fighting men for Victory has no less a responsibility in the years of peace ahead. Now that the war is won, we have the job of making this a better world.

AIREON produced huge quantities of communications and radar equipment and other machinery for waging war. Its achievements were equal to its heavy responsibilities, and its workers established an outstanding record of performance.

AIREON enters peacetime production with a notable engineering organization, highly skilled personnel and great confidence in the future. We have developed many products which will contribute to better living, for the manufacture of which all 15 AIREON plants will continue in production.

In order to extend our usefulness we recently established an experimental laboratory in Greenwich. AIREON's creative engineering in radio communications, electronics, musonics and hydraulics will team with production proficiency in contributing devices for future service.

In peace, as in war, AIREON will stand for quality and performance.

Randolph C. Walker
PRESIDENT

CINAUDAGRAPH SPEAKERS

Cinaudagraph Speakers

A DIVISION OF Aireon

3911 SOUTH MICHIGAN AVENUE, CHICAGO

Makes Vibrator Servicing Easy!

MFRS. PART NO.
SERIES NO. SET MFR. YEAR MADE
RADIART NO.
BASE DIA.
LIST PRICE
BUFFER COND.
CAR MAKER

Section A . . Vibrator

Name, Model No.	Mfrs. Part Number	Radiart Number	List Price	Base Dia.	Buffer Condenser
CHRYSLER					
C1808 (Elec. P. B.) (Philco—1941)....	83-0027	5326P	3.00	A	.005
25C6 (Wells-Gardner—1938)...	19A32	5437	5.95	AB	.018
600 (Mech. P.B.) (Colonial—1941)...	43697	5301	3.55	A	.004
601 (Colonial—1942).	911545	5301	3.55	A	.004
800 (Philco—1941)....	83-0027	5326P	3.00	A	.005

Every model listed includes all available data. The correct Radiart Replacement number and other essential information is determined instantly.

SECTION "B"—Cross

Diagram	Number	Shape	Voltage	Diam.	Ht.	Freq.	Identifying Characteristics	Max. Load Amps
B	3417	2	6	1 11/16	4½	105		6
	3815	9	6	1 13/16	4½	105	Spec. Cup	6
C	5309	1	6	1½	2⅝	105		6
	5331	1	6	1½	3⅛	105		6
D	4256	1	6	1½	3¼	105		10
	4256-12	1	12	1½	3⅛	105		6

In addition to conventional base diagram drawings this section is unique in that it groups all similar base types together indicating readily the differences between vibrators with the same base wiring. All characteristics are shown, including frequency and maximum load limit of each type.

In Other Sections . .

Section "C"—Buffer Condenser Values and Circuits.

Section "D"— Container Shapes permitting an easy method of "visual" identification.

Section "E"— Complete Vibrator Specifications arranged numerically by number. Contains necessary data not published in any other replacement guide.

Section "F"— Long a favorite with users of this guide. The only cross-index of all other manufacturers or merchandisers of vibrators, converting their type numbers to the Correct Radiart Replacement.

Section "H"— Numerical Listing of Radiart Vibrators. Furnishes complete information as to all models serviced by each unit. Also advises year each type was originated.

SECTION "G" — C
Radiart and Original Equ.

Original Equipment Part Nos.	Radiart Nos.	Original Equipment Part Nos.	Radiart Nos.	Original Equipment Part Nos.
75	3283	1974	5301	8539
80-161	5421	2080	3417	8540
82B	5341M	2110	3417	8541
83-0017	5326P	2269	5413	8542
83-0025	5326P	2404	5340M	8601
83-0026	5326P	2501	5411	8602

Another Radiart Vibrator Guide EXCLUSIVE feature. When called upon to duplicate a vibrator and no information is available except the number on the old one, use this cross-index which shows the original manufacturer's number (as stamped on vibrator) and the CORRECT Radiart Replacement.

Auto Radio Service Dealers:

Obtain this Guide free of charge from your Radiart Distributor. Ask him to furnish you with a stock of the popular 12 types of Radiart Vibrators each of which is guaranteed to CORRECTLY service the applications listed for it in this guide. With these 12 types you can satisfy nearly all of the "Demand" types. But — RADIART is a *complete* line and your Radiart Distributor renders a *complete* service and can quickly furnish all of the necessary slower moving correct Radiart Replacement Vibrators as well.

Manufactured by the makers of RADIART Rust Proof Aerials.

Radiart Corporation

3571 W. 62nd STREET • CLEVELAND 2, OHIO

Export Division
25 Warren St., New York 7, N.Y.

Canadian Office
455 Craig St. W., Montreal, Canada

"HIGH FIDELITY"

A. C. MATTHEWS

Some new slants, technical and otherwise, on a controversial subject

IT MUST BE RECOGNIZED that the problem of fidelity is a relative one, as consideration must be given to the quality of the program being transmitted as well as the conditions under which it is being reproduced. High fidelity in its true sense implies the faithful reproduction of the original transmission both as to frequency range and volume level, although the volume level need not necessarily correspond with that of the original. The term "high fidelity" has so often been associated with systems having an extended high frequency range that it no longer conveys its true meaning. Probably a new term should be employed which more nearly describes the practical attainable goal of reproduction with the systems available at present. Such a name would become inadequate, however, as soon as new systems were perfected, so for this reason it might be better to define "high fidelity" as understood at present.

In this article high fidelity shall be considered as the degree of perfection, for an average listener in an average residential room, which presents the illusion of hearing the program as it exists at its point of origin, insofar as frequency range and amplitude variations are concerned, but not insofar as being able to associate the source of the sound. It is assumed that distortion effects will be negligible and that the spatial distribution will be nearly constant over at least a 45 degree angle each side of the speaker system.

Before discussing what degree of perfection is economically practicable it might be well to review the characteristics of music and speech and determine the overall requirements for such a system.

Frequency and Power Range of Speech and Music

It is generally conceded by all engineers that a frequency range of 20 to 15,000 cycles is fully adequate to reproduce faithfully all fundamentals and overtones of any musical instrument or speech which are audible to the ear. Such a range is also sufficient to permit ready identification of such non-musical sounds as keys jangling, resin squeaks on bowed instruments and numerous other mechanical noises which are by-products of the music. Not that these sounds are desirable, nevertheless they are discernible on a high fidelity system unless precautions are taken to minimize their pickup.

As can be seen from *Fig. 1*, there is little to be gained by reproducing frequencies above 11,000 cycles except perhaps in the naturalness of the cymbals, triangles, snare drums and similar instruments. Likewise the low frequency response need not extend below 65 cycles except for the organ, bass viol and some unusual sound effects. So much for the required frequency range; no attempt will be made to establish the most practical bandwidth at this time, since there are many other factors to be considered. Instead, the variations in amplitude or intensity of the sound to be reproduced will be discussed.

Measurements by Fletcher[1] show peak powers as high as 66 watts, with average powers of approximately 0.1 watt as representative of large symphony orchestras. Conservatively, then, a 70 db range would be satisfactory for reproducing an orchestra at its original sound level. This of course is the extreme; other programs of speech, dance music or instrumental solos obviously do not require such a range, probably something of the order of 20 db being entirely satisfactory. Except for studio programs being transmitted by FM sta-

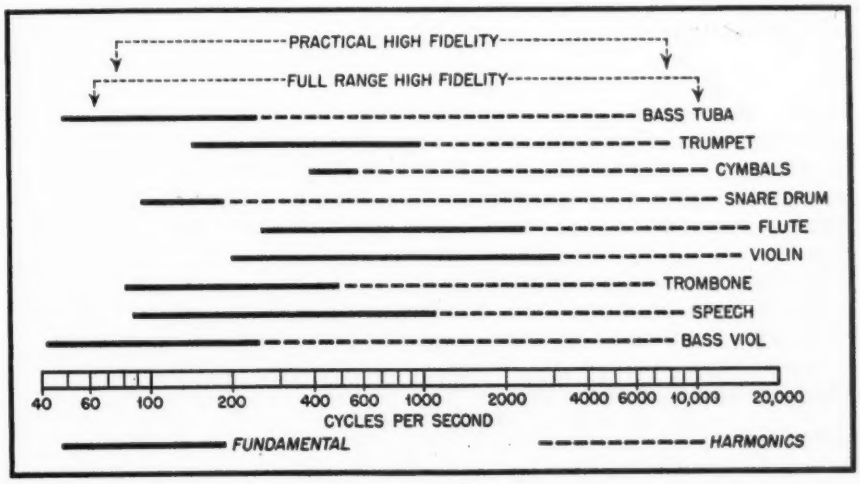

Fig. 1. Frequency range — speech and musical instruments

tions, the dynamic range is limited by the quality of the wire program line which may vary from 25 to 45 db according to the quality of the line employed. Although lines are limiting factors in many instances, they do not affect the overall maximum requirements and are only mentioned as an example of what is actually encountered in practice.

Summarizing we find a frequency range of 20 to 15,000 cycles and a volume range of 70 db capable of reproducing high fidelity programs in their original form.

FM Stations—Synthetic Vinyl Resin Recordings

Until FM stations came into existence very few programs were available capable of giving even so-called "high fidelity" reception. Modulating frequencies above 5000 cycles resulted in "monkey chatter" because of adjacent channel reception, and as mentioned previously, the volume range of most lines is quite limited because of noise considerations. FM stations, however, are capable of transmitting frequencies up to 15,000 cycles with a dynamic range of 70 db. This is due in part to the wide frequency bands available for this type service and also to the noise-reducing capabilities of the system in general.

According to the FCC Standards of Good Engineering Practice the FM station should be capable of transmitting a band of frequencies from 50 to 15,000 cycles, with certain prescribed pre-emphasis and with a noise level at least 60 db below the program at full deviation. Total distortion should be limited to from 2.5 to 3.5 per cent according to the modulating frequency. These specifications indicate the possibility of a true high fidelity service.

The same condition existed in the reproduction of phonograph records. The ordinary shellac disc had little above 3500 cycles and the surface noise was so high that the volume range was severely limited. With the introduction of synthetic vinyl resin recordings the surface noise has been tremendously reduced, and consequently the volume range increased accordingly. The recording of frequencies above 7000 cycles is also practicable. Thus, with these two new advances a big step has been made in the realization of high fidelity reproduction.

Characteristics of the Ear

Since the ear, in the final analysis, must be the judge of fidelity it most certainly should be taken into consideration when planning a true high fidelity system. Several of the more important characteristics, such as the frequency range, acuity, and the age of the listener will be discussed since these have an especial bearing on the problem.

The ear is a pressure-actuated non-linear device capable of actually supplying deficiencies (under certain conditions) in the quality of the music being heard. Furthermore, the frequency range and sensitivity vary appreciably with such factors as the age of the listener, the intensity of the sound wave, and the presence or absence of undesirable noise.

Many investigators have contributed to the knowledge of the characteristics of the ear, as can be seen by reference to the bibliography at the conclusion of this article. However, tests made at the World's Fair on approximately 500,000 people of all ages and sexes[2] have provided data which when analyzed[3] results in a statistical average frequency characteristic as shown in *Fig. 2*. For comparison purposes a curve of the critical listener (best 5%) has been included. Note that the two curves follow each other quite well except for the additional frequency range perceived and the sensitivity. A seven to ten db difference between 20 to 8000 cycles, which gradually increases to approximately 17 db at 12,000 cycles, should be noted. These curves indicate that it is possible for persons with acute hearing to perceive frequencies as high as 22,000 cycles and as low as 20 cycles, provided the intensity is high enough.

An interesting family of curves is shown in *Fig. 3* and are known as equal loudness curves. These show the characteristic of the ear over the audible spectrum, using a 1000-cycle pure tone as a reference. The curves include the entire range of intensity from barely audible (threshold of audibility) to the point where a sensation of feeling is experienced (threshold of feeling). As can be seen these curves vary both with intensity and frequency, reaching a maximum in the vicinity of 3000 cycles.

It is evident from the hearing-contour curves that the response characteristic depends to a large degree on the in-

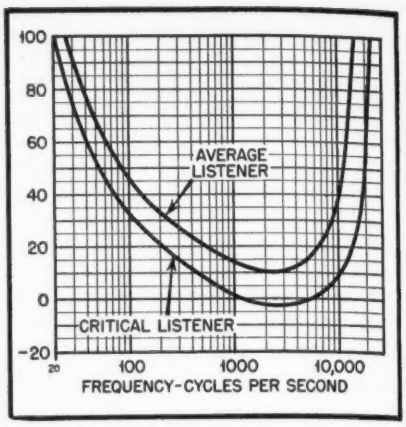

Fig. 2 Hearing contour curves for average and critical listener — no noise

tensity of the sound source. At low intensity levels, the low frequency response is comparatively poor. The high frequency response is similarly affected, although to a smaller degree. In other words, if the intensity of the sound source is increased a given per cent, the apparent increase will not be uniform over the entire frequency range; the apparent increase at the extreme low and extreme high frequencies audible at the lower level will be less than that of frequencies in the vicinity of 2500 cycles.

In addition to the above general characteristics, it has been found that there are variations in response due to the age of the listener. That is, as the age increases the high frequency response gradually decreases approximately as shown in *Fig. 4*. This has no important bearing on determining permissible fidelity range, however, since the system must be satisfatcory for all age groups.

Masking Effects of Noise

In actual practice we never have ideal listening conditions because of noise interference. Measurements[4] show the average residential room noise is approxi-

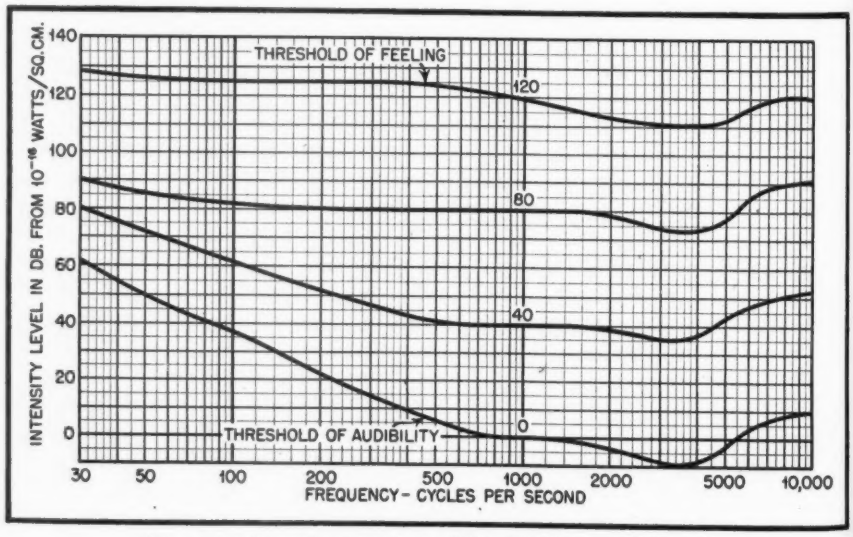

Fig. 3. Loudness level contours (after Fletcher and Munson)

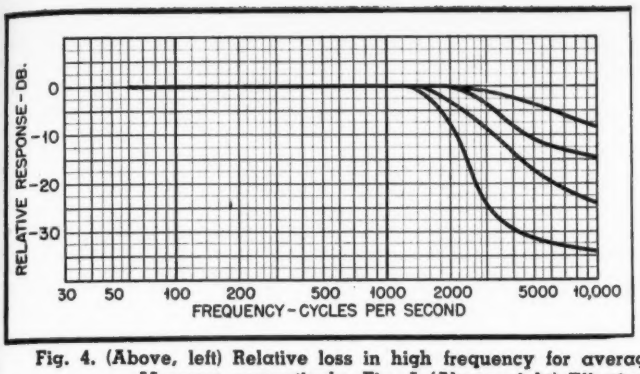

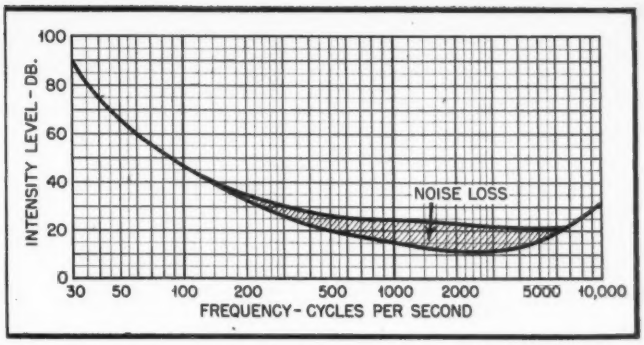

Fig. 4. (Above, left) Relative loss in high frequency for average listeners. Curves are for male listeners of ages 25, 35, 45, and 55 years, respectively. Fig. 5 (Above, right) Effective hearing characteristic due to masking effect of noise

mately 43 db.* Noise varies of course with conditions outside the home, the number of people in the room, etc., but probably never decreases below 33 db.* Its effect appears to be one of deafening the listener exposed to it and therefore must be considered in the overall result. Combining the masking effect of noise with the average ear characteristic results in curves as shown in *Fig. 5.*

Other noted effects are auditory fatigue, which may be caused by prolonged exposure to loud sounds, (an exaggerated example is the feeling of deafness after having taken a long airplane trip), temporary impairment of hearing due to illness and fatigue caused by listening to "narrow range" fidelity wherein the nerves of the hearing system attempt to supply those frequencies not present.

Determining Frequency Range

In the determination of the frequency range for a high fidelity system it is not enough to decide that since the greatest audible range extends from 20 to 22,000 cycles this should be the goal. From the previous discussion and associated curves it is evident that only a small percentage of listeners are capable of hearing such a range; furthermore this range can only be heard under certain conditions (high intensity levels) and granting it can be heard, there is very little to be gained in enjoyment or perceptibility. Obviously, then, the range can be reduced to at least 11,000 cycles at the high frequency end, and probably to 65 cycles at the low frequency end. Another factor, however, enters the picture at this point, that is, tonal balance.

A few years ago, designing a high-fidelity receiver consisted of merely increasing the high-frequency response and extending the upper range a few thousand cycles on an otherwise normal receiver. This resulted in a very thin-sounding receiver because the balance between bass and treble response had been disturbed. Unless both extremes of the frequency pass-band are extended, the overall result is disappointing. The main problem is to obtain a balance between the high and low frequency cutoffs. Of course other factors such as practicability, psychological and physiological effects are important but unless the tonal balance is correct true high fidelity will not be achieved.

Balance requirements are not too critical; in fact, if the product of the low frequency and high frequency cutoffs fall within the range of 500,000 to 650,000 the results will be quite acceptable. This is shown graphically in *Fig. 6.* Statistics[3] show that a range of 75 to 8000 cycles will suffice for the average listener; it is then a matter of economics whether this should be the accepted range or whether the additional cost involved in obtaining a range of 65 to 11,000 cycles is justifiable. This latter range is considered adequate for critical listeners in very quiet surroundings. So much for the frequency range.

The power in watts of sound radiated, varies over a tremendous range, as shown in Table 1. Although the actual range in power between a full orchestra and a soft passage on the violin amounts to approximately 20 million to one, the sensation of loudness, being logarithmic, is only about 70 db. In other words a dynamic volume range of 70 db is required to reproduce fully an orchestra of 75 pieces.

In the average home a volume level of 85 db is about as high as can be tolerated with any degree of comfort. Quiet operation, or the other extreme would be a level of 40 db, or a dynamic range of 45 db. This takes into account the noise level of the room, and of course is subject to some variation, but it is representative of a range extending from very loud to very quiet (but listenable) volume. It is questionable as to whether levels much below 50 db are of any consequence for fidelity, although they are important so far as enjoyment of dynamic range is concerned.

Listening Habits

Because of shortcomings, either through lack of training or appreciation, the average listener does not fully realize the capabilities of high-fidelity reception. It must be remembered, however, that the general public is becoming more conscious of high fidelity through the medium of present-day advertising, and that the desire for tuning-in distant stations is gradually being replaced by the desire to obtain noise-free realistic reception.

The use of narrow-band receivers over a period of years has made them appear more preferable than many high fidelity units. There are several possible reasons for this preference: (*1*) Distortion is more prevalent in a wide range receiver unless special precautions have been taken to minimize its effect. (This is not always due to the receiver but is very frequently caused by the broadcasting station using poor recordings.) (*2*) The permissible amount of distortion

*Above threshold of hearing.

TABLE 1

POWER OF VARIOUS SOUND EFFECTS

SOURCE	POWER-WATTS
75 piece orchestra	70
Bass drum	25
Pipe Organ	13
Snare drum	12
Cymbals	10
Piano	0.4
Bass voice	0.03
Average speech	0.000024
Violin (soft)	0.0000038

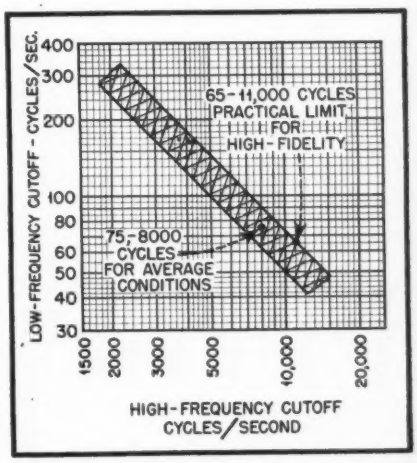

Fig. 6. Low and high frequency cutoff graph for tonal balance showing the comparative values both for average conditions and for high fidelity.

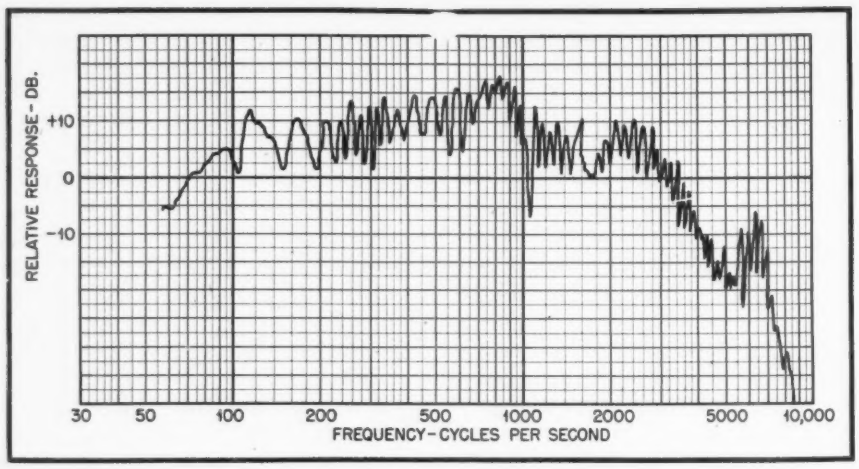

Fig. 7. Sound pressure curve showing effects of reflections in live room

and noise decreases as the width of the frequency pass-band increases. (*3*) The signal strength of the station is also a factor. If this is not strong enough to override the noise induced into the receiver, the program fidelity is very definitely reduced. Many listeners have grown accustomed to a so-called "mellow" tone because it has been necessary to retard the tone control in order to eliminate unwanted noise and distortion. Items such as these can and are gradually being corrected as the appreciation for high fidelity increases. At present only a few programs require high-fidelity receivers because, unless the quality is transmitted, it cannot be received.

High fidelity must be demonstrated to the listener under ideal conditions for full appreciation and the naturalness must definitely be pointed out. A simple test for high fidelity is the ease with which it can be listened to for long periods of time. Inferior quality puts a strain on the nervous system because the ear attempts to supply the deficiencies and gradually becomes fatigued.

General Considerations

Having discussed the characteristics of the ear, the desired frequency and volume range, and the listening habits of the public, the next step is to determine what technical problems are involved in obtaining high fidelity reproduction.

The requirements are obviously as follows:

1. The overall reproducing system (transmission is assumed to be ideal) must be free of amplitude distortion or limiting at the required output level.
2. Spurious harmonics must not be introduced at any operating level.
3. Noise, phase distortion, and cross-modulation products should be minimized.
4. The acoustics of the listening room should be satisfactory (without excesssive damping or reverberation) and the spatial reproduction should be as nearly uniform as possible.

Measurements can be made of all characteristics including overall sound pressure curves, but the latter can be very misleading if not properly interpreted. Sound pressure curves indicate the acoustic response under a given set of conditions and, unless these conditions are exactly the same when the listener is using the unit (the listener being in the same position as the microphone) the measured curve will not be a true picture of the acoustic output. Even under the above conditions some discrepancies are bound to occur because of the fact that the listener has two ears which makes possible the localization of the sound source. Due to reverberation in the ordinary room the sound is reflected from the walls, ceiling and floor and therefore reaches the listener from many points with different phases and amplitudes and, due to the binaural effect, results in a quite different response from that measured with a single microphone. This is particularly true when listening to high frequencies. It is possible to walk around a room when listening to a single high frequency note and be able to distinguish readily nodes and anti-nodes due to reflections. A typical sound pressure curve showing the effects of reflections in a small room is seen in *Fig. 7*. Out of doors the same condition exists except the time lag is longer; resulting in echos. This of course assumes there are reflecting surfaces nearby.

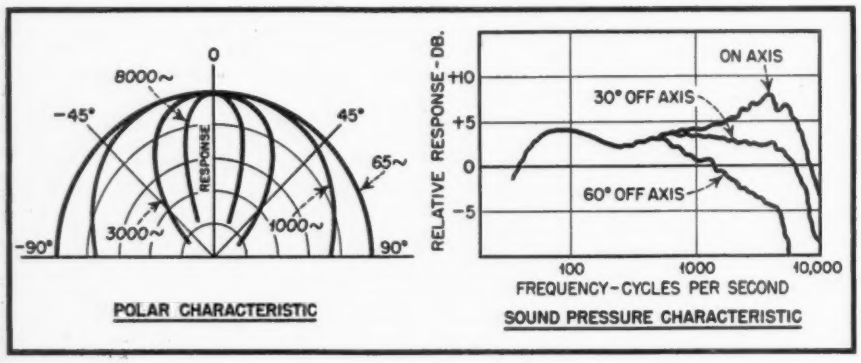

Fig. 8. Polar distribution of sound for typical speaker

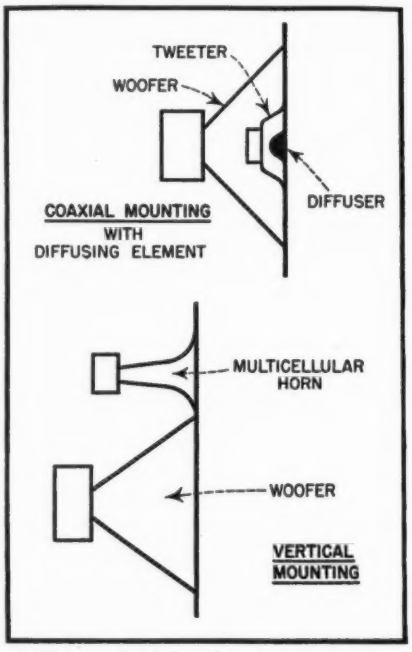

Fig. 9. Dual Speaker arrangements

All these phenomena clearly indicate that the final checking of a high fidelity system must be made by exhaustive listening tests.

Acoustic Considerations

Very little can be said about the acoustic characteristics of the residential room, since the average listener will do nothing about it anyway, except perhaps to locate the receiver in a corner or to avoid putting it where a hard wall surface close by might cause severe reflections. Other than a few minor changes such as these the room acoustics are beyond control. Therefore, it is up to the designer to make the unit flexible enough to compensate for these faults. This can be accomplished by adequate tone controls and uniform spatial distribution of the sound.

Unfortunately, sound waves emanating from an ordinary speaker do not

have a uniform spatial characteristic. In other words, the listener cannot move to different places in the room without noting a difference in the quality of the reproduction. A typical polar characteristic is shown in *Fig. 8* together with sound pressure curves. These curves have been smoothed up a bit for clarity. It is evident then that steps must be taken to provide a better polar characteristic, otherwise it would be necessary to sit directly in front of the speaker if the high frequencies are to be heard in their right proportion.

This brings up another point; it is impossible to cover a range of 65 to 11,000 cycles with one speaker. Instead, dual speakers are required with an appropriate network which divides the electrical power at approximately 1000 cycles. Several arrangements are possible with dual speakers (commonly called woofer and tweeter) as shown in *Fig. 9*. One method necessitates the mounting of the high frequency tweeter coaxially within the low-frequency speaker. The tweeter then acts as a diffuser for the large speaker. A small diffusing unit may then be placed in front of the tweeter for better high frequency distribution. Another method uses separate mountings for each speaker with the tweeter being of the multicellular horn type which has an improved polar characteristic. Sound diffusers, when properly designed, are more practical since they simplify the design problems and are less expensive.

Of equal importance to the acoustic properties of the room is the speaker enclosure or cabinet. This can be altered to a certain extent by the designer. A square, flat, symmetrical speaker baffle, for instance, should never be used because its symmetry results in the cancellation of frequencies at its cutoff point as shown in *Fig. 10*[5]. This is caused by the radiation from the front and rear of the speaker cone arriving at the listener exactly out of phase with each other. The simple expedient of mounting the speaker on an irregularly shaped baffle will, for all practical purposes, eliminate this fault. Another common error, when two similar speakers are used, is to mount them equally spaced from the edges of the baffle and as far apart as possible. The two speakers should be located close together and somewhat off center. The cones, which are in phase of course, then load each other more effectively and a more efficient coupling to the air is obtained which results in better low frequency response.

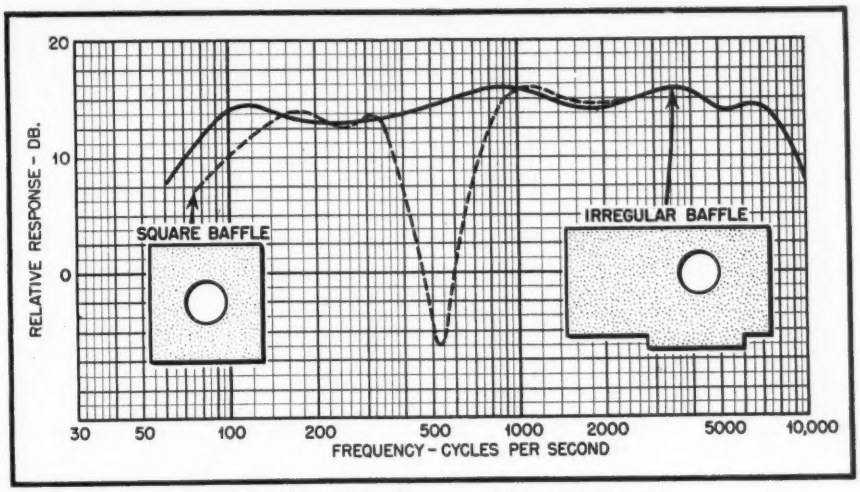

Fig. 10. Effect of baffle on sound pressure curve

Because of the physical size required, open baffles do not function well much below 125 cycles and it was for this reason that acoustic labyrinths and bass-reflex enclosures were developed. Adequate descriptions of these are to be found elsewhere and therefore will not be discussed at this time. (See bibliography for further details.)

Electrical Considerations

Granting that there is no particular difficulty in obtaining a frequency range of 65 to 11,000 cycles, the major problems are those of distortion, hum, noise and amplitude relations.

The presence of hum or noise in the output of a high fidelity system is particularly objectionable because of the large volume range required. Assuming a dynamic range of 45 db is required, the hum or noise level must never exceed —45 db compared to maximum output. It is desirable to design the system to much better standards; —70 db below maximum output being a more practical value, since it can be attained, and results in a good safety factor.

Beam power tubes are the logical choice for the output stage. These provide high power output with good power sensitivity, but unfortunately the distortion generated by this type tube (principally third harmonic) is rather high. Of course, when used in a push-pull circuit and properly balanced, the even harmonics are effectively eliminated. The third harmonic remains, however, and this is very objectionable to the ear; much more so than the second harmonic distortion.

The logical solution to the problem lies in the use of degeneration.[6] In fact a degenerated amplifier is the only practical solution to the problem. The degree of degeneration of course determines the magnitude of the distortion. Not only does degeneration reduce distortion but it effectively minimizes hum and noise components; it also reduces amplitude distortion resulting from saturation of iron-cored components which often produce false harmonics when working at full capacity. In addition to these almost Utopian qualities, degeneration is noted for the improvement it makes in the frequency characteristic without objec-

[*Continued on page 72*]

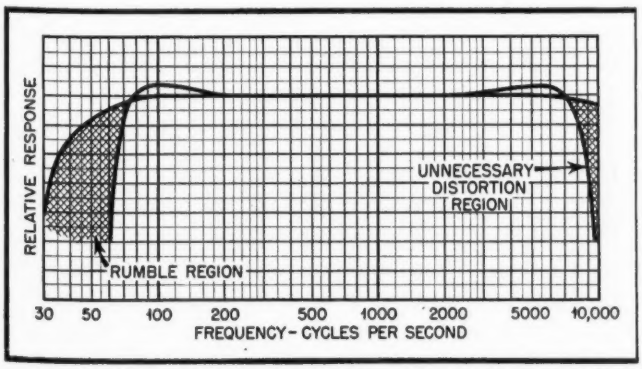

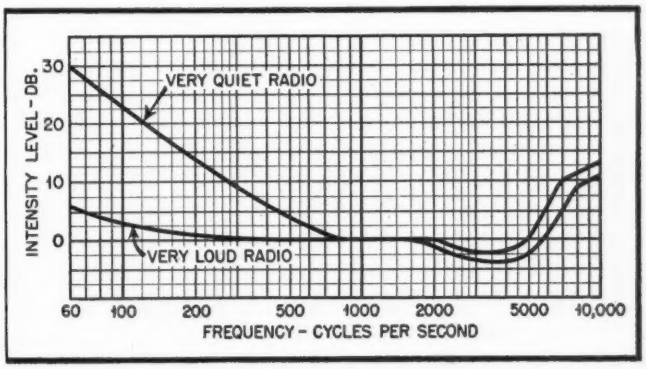

Fig. 11. (Above left) Amplifier having desirable sharp cutoffs. Fig. 12. (Above right) Compensation required over volume limits in the home. Listener on axis of speaker

Effective Permeability of High Frequency Iron Cores

W. J. POLYDOROFF and A. J. KLAPPERICH

Consulting Engineers, Chicago, Illinois

For the first time, a complete set of curves on this subject, and their interpretations, are presented in this article

THE USE OF HIGH FREQUENCY coils containing magnetic core material is well established in the radio industry. Permeability tuning, resulting in compact units, immune to microphonics, and having high electrical stability is rapidly gaining favor. The efficiency of iron cores can be best judged from data announced by G.A.W.,[1] where savings up to 80% in space and 33% in weight can be realized with such cores simultaneously, and at the same time achieve a large increase in Q and a gain in inductance. Great strides are being made in the production of iron powders, both in increasing the permeability and extending the high frequency range, now in the region of 200 mc.†

Until recently the characteristics of powdered iron coils were determined by cut and try methods. There did not exist formulae upon which the designer could predict the electrical characteristics of a proposed design. This left the engineer to a great extent at the mercy of the core manufacturerer as to geometrical configuration, permeability of core, coil and wire size, etc.

It is true that the core producer, with a large background of empirical data is able to make an optimum choice, yet the gap between theoretical considerations and practical applications still exists. This can be clearly indicated by the dearth of data, under the heading of iron cores, in any radio engineering handbook. Only recently this laboratory, among others, undertook a systematic investigation with the view of narrowing this gap and hence achieving a more complete utilization of iron cores and a better understanding of the phenomena associated with high frequency magnetic fields.

†IRN-8, George Mepham Company.

Deriving Q and Mu

What is needed by the radio industry is practical data on Q and permeability for the purpose of guidance in arriving at optimum coil design. These two essential characteristics should be deducible from the geometric configuration of the core and coil, and the electric and magnetic properties of both components.

The magnification factor or Q, which is defined as $L\omega/R$ can be measured on a Q meter. Various formulae have been proposed to define Q as a function of basic properties of coil and core. Foster[2] proposes the lumping of the iron losses ρ (inherent in the term R of the expression $L\omega/R$) as an iron loss factor in the formula.

$$R_i = L_o \frac{4\pi \mu^2 b_i^2 l_i \rho}{b_o^2\sqrt{4b_o^2 + l_o^2}}$$

Where:
R_i = equivalent resistance added to coil due to iron
L_o = coil inductance
l_i = core length
b_o = mean coil radius
μ = composite core permeability
b_i = core radius
l_o = coil length
ρ = iron loss factor

He arrives at this iron loss factor ρ after measuring a coil and core of a given form; this is valid for the coil of that given shape, but we are no closer to evaluating Q for any other type of coil than we were with the $L\omega/R$ procedure. Furthermore it is indicated that ρ is a complex function of frequency and cannot be determined from the magnetic properties of the iron slug.

Other investigators clearly indicate dependence of iron losses on magnetic induction, or in other words on the permeability of the core material. Howe[3] in close agreement with Latour[4] expresses eddy current losses as being proportional to

$$B^2 t f^{1.5} \mu^{-1/2} \rho^{-1/2}$$

Where:
B = magnetic induction
t = lamination thickness
f = frequency
μ = permeability
ρ = resistivity

It is clear, therefore, that the iron losses are dependent on the mutual geometry of core and coil, core material permeability and its utilization in the coil.

Measuring Mu by Toroidal Ring Method

The true permeability, μ, defined as B/H of solid ferro-magnetic material, is measured most accurately by the standard toroidal ring method, wherein a ring of magnetic material is uniformly wound with a toroidal winding. The H in the ring can be determined by well known formulae from the measured magnetizing current. Due to the fact that a toroid has no free poles the calculated magnetizing force is the H that gives rise to the magnetic induction B in the sample. This B can be suitably determined by ballistic methods. Corrections

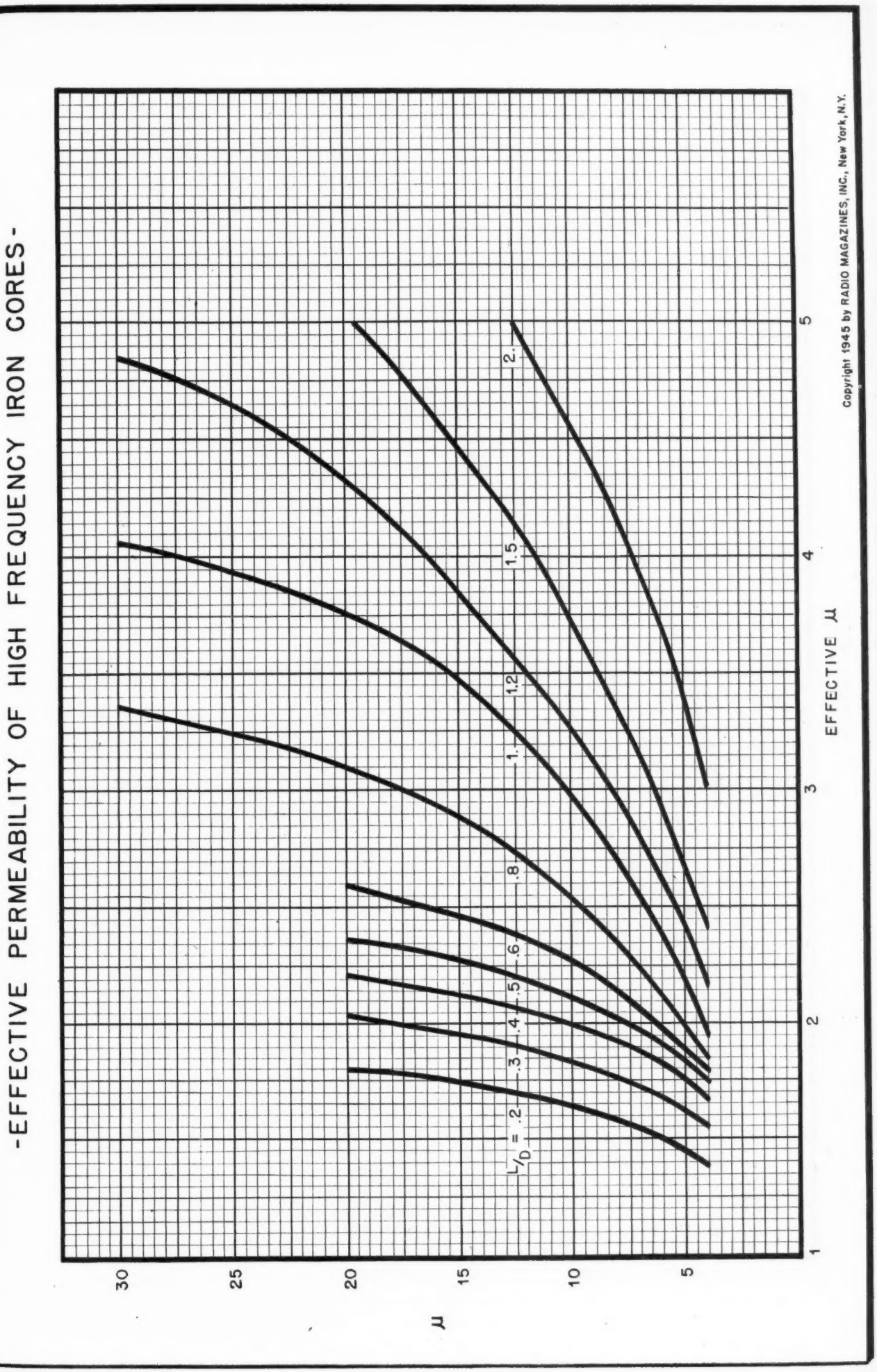
-EFFECTIVE PERMEABILITY OF HIGH FREQUENCY IRON CORES-
μ
30
25
20
15
10
5
L/D = .2
.3
.4
.5
.6
.8
1.
1.2
1.5
2.
1
2
3
4
5
EFFECTIVE μ
Copyright 1945 by RADIO MAGAZINES, INC., New York, N.Y.

must be made for the difference in the cross-sectional area of the toroid and the mean turn area of the coil and also for the unequal distribution of flux through the ring.[5] Thus we have an exact value of the true permeability of the solid ferro-magnetic metal, but in the case of comminuted and compressed ferro-magnetic material the solid metal permeability cannot be directly applied.

It has been indicated by Howe[6] that on theoretical grounds (assuming uniformly distributed cubic particles which are separated by an insulating relative volume δ) the composite permeability is

$$\mu' = \frac{\mu - 0.667\delta\,(\mu - 1)}{1 + 0.333\delta\,(\mu - 1)}$$

where μ is the permeabilty of the solid ferro-magnetic metal and μ' is the composite permeability of the powdered material bonded with a relative volume δ of insulating media. The formula indicates that μ' is a function of solid material permeability μ, but with a small volume of binder the rate of change of μ' is decreasingly smaller as μ increases beyond a value of 100. We should keep the amount of binder to a minimum in powdered, bonded and insulated cores that are used in radio industry for achieving maximum composite permeability.

Fortunately, the standard toroidal method of measuring can be used again, as indeed it is with composite iron core materials. A few words of precaution should be presented here. In actual measurements, on a ring of powdered material, the amount of binder must be the same as in the actual sample, i.e., both samples must have the same magnetic content, density, and degree of insulation.

It is also of prime importance to measure powdered iron cores at flux densities low enough so that they are in the region of the initial permeability plateau. This is best done by using an inductance method of measuring, rather than a ballistic method.

So far we have mentioned rings with no free poles. With open type cores as used in the radio industry, a magnetic pole appears at each end, when longitudinal magnetization is being applied (an infinitely long core, in an infinitely long solenoid would theoretically approach a toroidal ring). Because of these poles the actual magnetizing force H' is always less than the calculated magnetizing force H, by a factor containing N, the demagnetization coefficient and I, the intensity of magnetization.

$$H = H' - N I$$

This formula can be reduced to

$$\frac{1}{\mu} = \frac{1}{\mu'} - \frac{N}{4\pi}$$

the value of the factor N is a complex function of length L and diameter D of the cylindrical specimen.

Bozorth and Chapin[7] have published interesting curves based on computations of Stablein, Schlectweg, Neumann and Warmuth. These curves give the demagnetization coefficient and apparent permeability for various L/D ratios (5-2000) of material having permeabilities ranging from 10-100,000. Unfortunately their data does not cover small L/D ratios and low permeability values encountered in ferro-magnetic radio frequency cores. Furthermore, their evaluations are based on ballistic methods, hence the validity at high frequencies is questionable.

New Attack on the Problem

Therefore we have studied the problem from both a practical and theoretical viewpoint, for the purpose of evolving data that will predict the behavior of an iron core from basic magnetic quantities and physical measurements.

In this investigation we measured the permeability of composite material by the toroidal ring method, at 1000 cycles; the materials having the same composition as the slugs which were used in determining effective permeabilities. The effective permeability μ_e of such slugs defined by $\frac{L\ iron}{L\ air}$ was measured by the change in inductance produced by the iron slugs.

The effective permeability of a cylindrical core is defined as $\frac{Li}{La}$ when the winding is of infinitely thin wire and the wire is tightly wound on the cylindrical surface, throughout the entire length of the core, (core length = coil length). This quantity represents the maximum inductance increase obtainable from a given cylindrical core, and as such is never realized in practice. There is always a difference in core area and mean turn coil area which results in a reduction in effective permeability. This difference can be evaluated as shown. Therefore, it is possible to measure the inductance of solenoidal coils with and without iron, and with certain corrections to arrive at a family of curves as presented herewith.

This family of curves shows the effective permeability μ_e of cylindrical slugs, which have various $\frac{\text{length of core}}{\text{diameter of core}}$; $\frac{L}{D}$ ratios; and are made of composite material of permeability μ.

It is apparent at a glance that the material of high composite permeability (μ = 30 to 40) suffers the most when used in cylindrical cores. For it requires a slug 8 times longer than its diameter to obtain an effective permeability of the order of 16. Quite to the contrary, the material of low composite permeability (μ = 5) is almost fully utilized with a slug which has an L/D ratio of only 4. In this case an effective permeability has a value of 4. Thus we may already deduce from these curves the desired shape of the cores when the composite permeability is known.

We may also see that for a given L/D ratio of a core there is an optimum composite permeability, and that any further increase yields decreasing returns in effective permeability. For instance in a cylindrical core of L/D = 1, maximum effective permeability of 3 is reached at a composite permeability of 10. In order to further increase the effective permeability one should increase L/D ratio. In our example, doubling the length of the slug yields an increase in effective permeability to 4.5, whereas doubling the composite permeability will increase the effective permeability to only 3.6. Only high ratios of L/D will justify the use of an iron of composite permeability above 35. The effective permeability of a slug having an L/D ratio equal to 8, is 16 when the composite permeability is 33. This can be increased by only a small factor, (to 16.3) if the composite permeability is increased to 40. This last example is of particular interest as the users of cores for permeability tuning are clamoring for a higher effective permeability Q not realizing the fact that the core producer is unable to meet their demands because of this inescapable fact. There is always a practical upper limit of effective permeability, *which is a function of composite permeability at a given L/D ratio.* In the last cited case, theory indicates that if the infinite composite permeability could be obtained, an effective permeability of 50 would be realized with an L/D ratio of 8. This should be of interest to the designers of electrical machinery when closed magnetic circuits cannot be realized.

It is to be repeated again that the effective permeabilities shown on the graph will always be reduced in practice due to the difference of core area and mean coil area, but is increased due to "free ends", i.e., where core length is greater than coil length. We have developed an empirical formula that holds true for a very wide range of variations of core and coil lengths. If we assume the coil length to be l, and the core length as L (where $L \geqq l$) then μ'_e the corrected effective permeability of

[*Continued on page* 70]

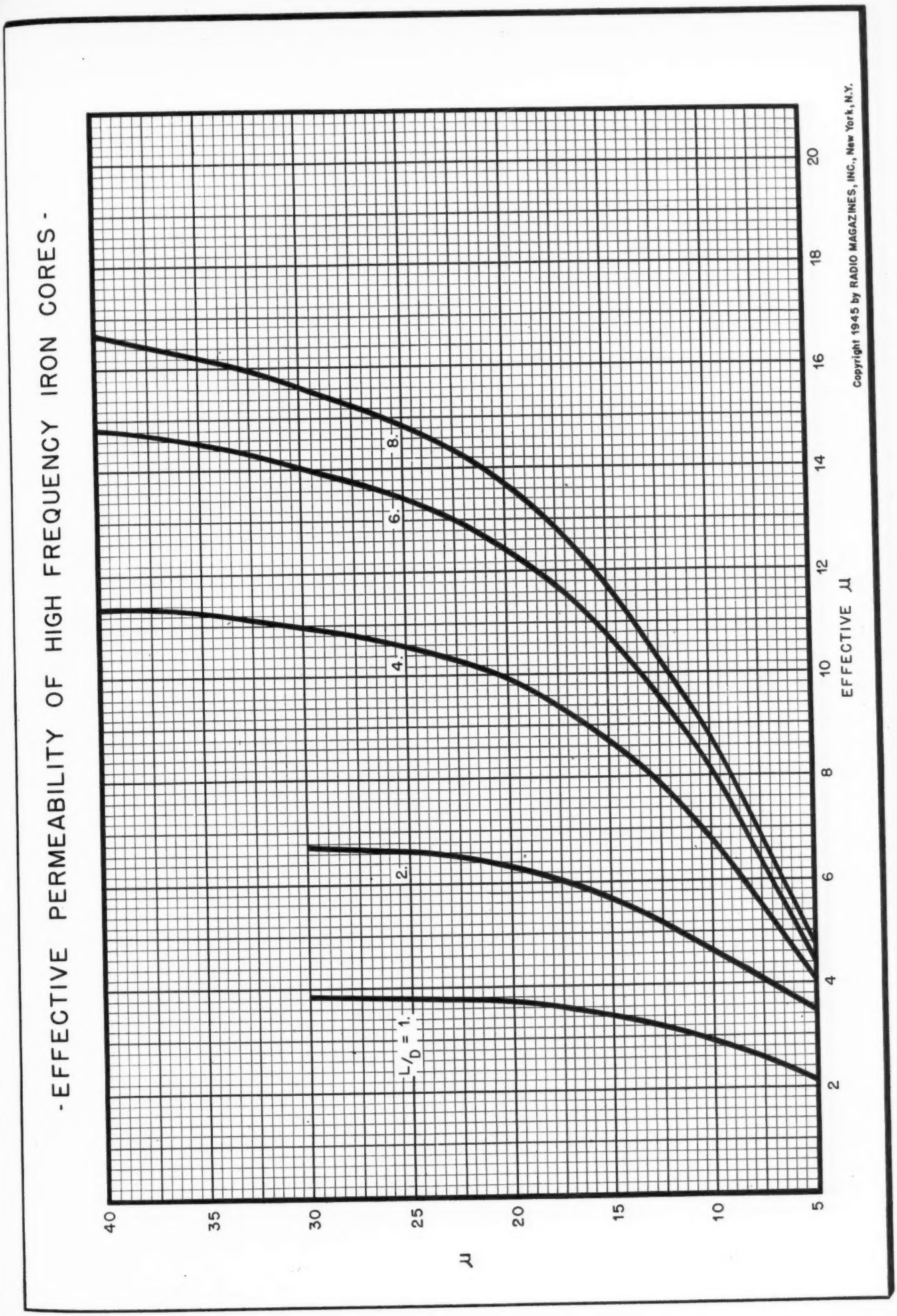
-EFFECTIVE PERMEABILITY OF HIGH FREQUENCY IRON CORES-
EFFECTIVE μ
μ
L/D = 1.
2.
4.
6.
8.
2
4
6
8
10
12
14
16
18
20
40
35
30
25
20
15
10
5
Copyright 1945 by RADIO MAGAZINES, INC., New York, N.Y.

Radio Insulating Materials

ALBERT H. POSTLE

Engineer, Mycalex Corporation of America

Ceramic materials introduced; limitations of plastic insulation

PART 3

OUR CONSIDERATION of radio insulating materials to date has been confined to the laminated thermosetting plastic forms and, in specific, to the phenolic or modified phenolic types. That our scope has not been broad in terms of the whole field of electrical insulation is admitted.

Certain other forms of electrical — and, in particular, radio — insulation will be considered. We shall in turn introduce the ceramics, the high frequency thermoplastics, the molded thermosets, and other types.

That the thermosetting plastics have limitations has been pointed out in our previous discussions. We shall pursue further the subject of these limitations so that we can introduce a new group of materials called ceramics.

Both the word "plastic" and the word "ceramic" defy rigorous definition. Most definitions of the word plastic introduce the thought that the material is capable of being formed or molded, or of being pliable. Still other definitions of the word plastic include the fact that the material under certain conditions is pliable and is thus capable of being shaped into the desired form.

Most all materials, however, will meet the tests given above since these statements are too generalized. Mica, quartz, and a few other similar materials are exceptions to this rule. However, it has been the convention to limit the descriptive term to organic or synthetic materials. Ceramics, in a sense, possess the quality of being pliable in an unfinished state; but thermosetting plastics likewise are pliable only in an unfinished form. Ceramics, however, are identified by the fact that they are made of earthen materials through the agency of fire or heat.

Typical ceramic forms are steatite, porcelain, glass, glass-bonded mica, and rutile forms.

Limitations of Plastics

Plastics, as we know them, are organic in nature. As such, temperature limitations seriously affect the maximum useful working range. Most plastics are usable to approximately 100°C., although certain others such as nylon do not deform up to 200°C.

Materials can be prepared among the plastics which will extend the maximum operating temperatures. Such materials, as a rule, must become complex molecularly since plasticity of the molecule arises from the simplicity and symmetry of its structure. Lack of simplicity of molecular structure leads to lack of stability of the material's dielectric structure.

Examining the stability of the material's dielectric structure, as we have in our preceding discussions, shows that high dielectric constant and high dissipation factor are commonly associated with a non-symmetrical molecular structure.

Perhaps the easiest explanation of

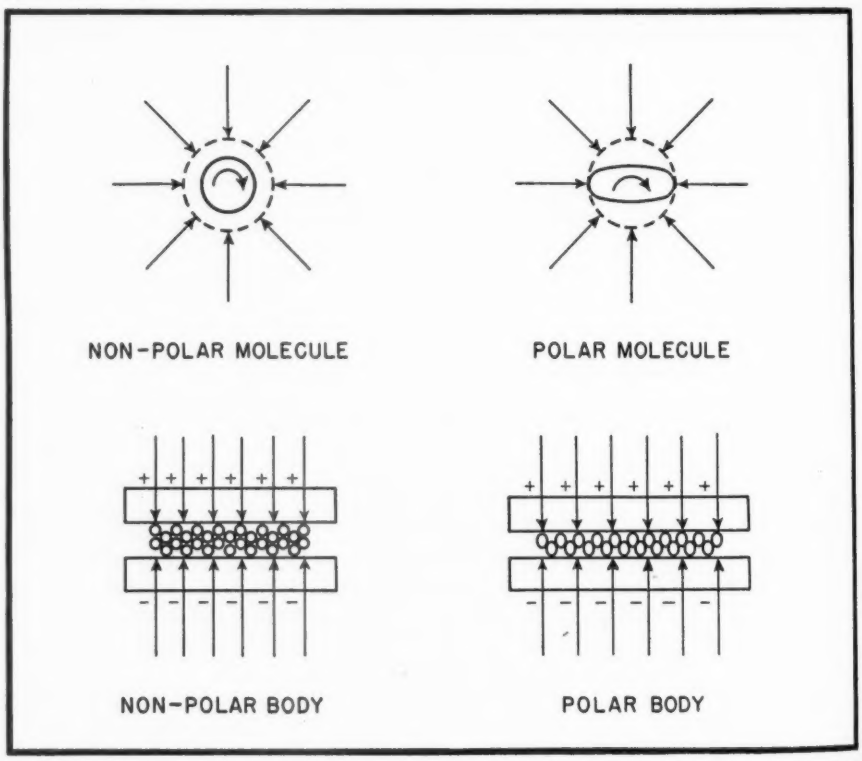

Fig. 1. Simplified analysis of the freedom of a non-polar low-loss body to rotate when placed in an electric field; polar bodies cause higher electrical loss since they cannot respond as quickly to an electrical charge.

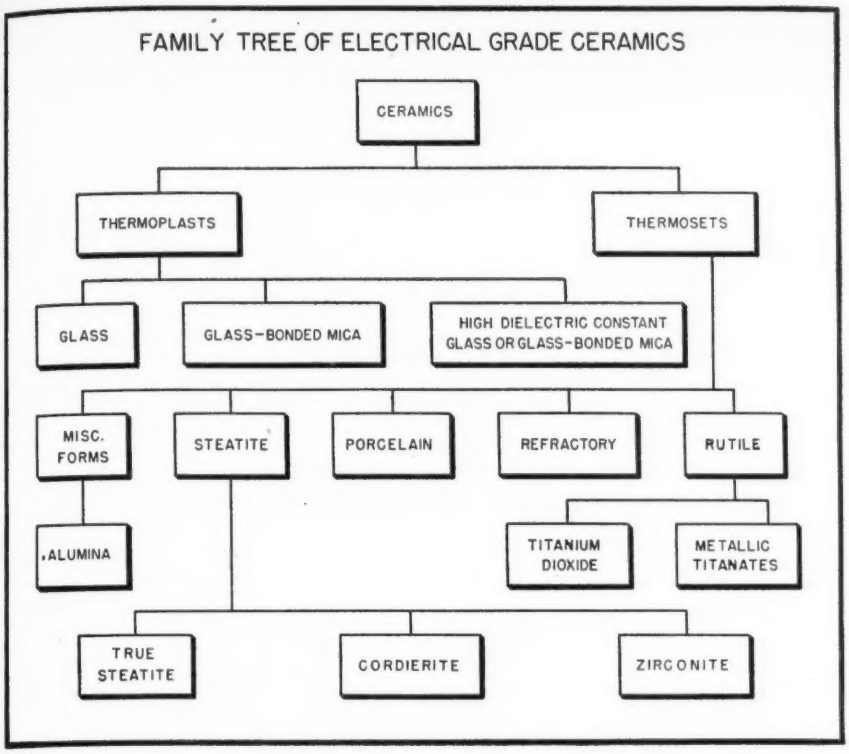

this statement can come from the examination of two geometric forms rotating through an arc. Assume a perfect circle rotating through a circular space and assume an elliptical shape rotating through the same space. As the enclosing boundaries approach the limit of the geometric forms rotating, the perfect circle moves with little difficulty while the elliptical shape begins hitting the walls, causing energy loss and heat of friction dissipation. This is graphically illustrated in *Fig. 1.*

A simple C-H shape in the organics is typical of the circular shape in the example above; a C-H organic with certain OH, chlorine, or metal salts present is typcal of the elliptical shape. Since the former is a simple shape—an evenly balanced shape, if you will—it is easily charged or discharged with an electric current; thus, it has a relatively low dielectric constant, the quality which defines the amount of electrical charge a material will accept. At the same time, the ability of this material to rotate freely on its molecular axis contributes to a relatively low loss factor since energy is not wasted in its response to an electric charge.

The more complex shape regularly accepts more electrical charge and has, by virtue of this characteristic, a higher dielectric constant. Its lack of mobility in rotating on its molecular axis leads to a relatively high loss factor.

(The author is quite aware that this discussion tends to oversimplify the problem of dielectric constant and dielectric loss factor. Certain rules have been promulgated in classical dielectric theory which explain the increased dielectric constant and losses when certain organic radicals are added to the basic synthetic. That these rules are beyond the scope of this article is acknowledged. The reader, however, should be aware of the fact that a material's polar behavior can be predicted fairly well by the number of complex radicals added to the basic compound and the position assigned to these additional radicals.)

Similar reasoning concerning complexity of molecular structure does not apply to the same extent when basic materials other than carbon are analyzed. Thus the ceramics, which are primarily simple or symmetrical forms molecularly, have low loss factors associated with their simple molecular structure, but they have higher dielectric constants associated with their higher molecular weight and metal salt content.

We shall further explore this subject at a later date in this series—but first we wish to investigate other limitations of plastics.

Other Plastic Limitations

Physical strength properties are other limitating influences against the use of plastics in certain designs. Consider the formation of the plastic forms versus the formation of the ceramic forms.

Plastics and ceramics can each be subdivided into two groups: thermoplastic and thermosetting. Polystyrene and glass-bonded mica are examples of thermoplastic plastics and ceramics respectively; phenolics and steatite are examples of thermosetting plastics and ceramics respectively.

Usually the thermoplastic plastic forms originate in a polymerization action. Two inactive materials, with the proper catalyst, and proper temperature and perhaps pressure, blend chemically to form a new material. This chemical action is not usually reversible by renewed heat or pressure; such heat and pressure usually cause the material to flow, but to become solid when it recools.

Glass and glass-bonded mica, the two thermoplastic ceramic forms, are prepared in a similar fashion. Here certain raw materials are fused at relatively high temperatures and then quenched in water. The shattered particles are called "frit" and do not decompose or revert to their natural state. This material, when heated under pressure, will melt but will return to its normal solid state on recooling. This does not imply, of course, that it will reassume the shape it had before the application of heat and pressure.

The thermosetting plastics are formed under heat and pressure and do not melt or return to their basic stages. Here two inactive materials, again with a suitable catalyst, form a new material at the time of molding under the proper conditions of heat and pressure. In this respect, the thermosetting plastics differ from the thermoplasts; thermoplasts can be successfully remolded because molding causes no chemical change in the material. This is not true of the thermosets. In addition, the thermosets, once molded, cannot be re-formed. The only exception to this rule is a "green" or partially-cured molding where post-forming operations can be completed before the material sets up hard.

The thermosetting ceramics are similar to the thermosetting plastics in that chemical change takes place under the heat. Pressure is not applied during the firing process, since the material has already been preformed (pressed or extruded) to shape. During the firing operation, the water of crystallization is slowly driven off the ceramic, and the material solidifies.

Each of these processes, you will note, is slightly different. The density, the hardness, the physical strength and the resiliency of the finished material will be defined by the process of forming as well as by the chemical structure.

For example, resiliency is an outstanding property of the plastics as compared to the ceramics. Consider the gamut of flexibility and resiliency that can be found in the plastics: from the elastomers such as vinyl chloride or synthetic rubber to the somewhat solidness of the phenolics or cellulose acetate. Yet, each of these materials possesses

[*Continued on page* 68]

HERMETIC S

GEOFFREY HERBERT

HERMETIC SEALING is not novel and can be achieved by existing methods. It is possible to use the same manufacturing facilities to make the cases of hermetically sealed components that are also used for making the tin can containers for foods. Moisture, fungus, dirt and lowered atmospheric pressure are the main attacking forces that climate uses against electronic devices. The effects of these conditions are discussed below.

Effect of Moisture on Insulation

The greatest enemy of electrical insulation is moisture. The insulation of electrical coil windings in relays and transformers is principally organic. The organic cellulose products, paper and cotton cloth or sleeving, are still the most versatile and frequently used forms of insulation. Though the coils are usually vacuum impregnated with varnish and baked, the varnish only retards the entrance of moisture and reduces the amount of moisture which can accumulate inside the coil by filling the pores of the paper and the voids between turns with varnish. Many of the varnishes are natural resins dissolved in a volatile solvent. When the coil is impregnated, the mixture of resin and solvent fills the void. Subsequent baking drives out the solvent and leaves residual voids whose size is proportional to the percentage of solvent in the original mixture. Newer solventless varnishes employing tung oil, phenolic resins, or similar polymerizing vehicles leave almost no voids.

Kraft paper, fish paper, grey fibre, paper or cotton-based laminated phenolics do not have any residual voids, but the cellulose fibres of the paper or cotton will absorb moisture and have lower insulation resistance.

The best explanation for the moisture damage is based on the assumption that there are slight traces of acids, alkalies or neutral salts which are left in the paper or cloth by the manufacturing operations. Some of these impurities may be deposited on the insulation during assembly. The fingertips and palms of the average person's hands are continually perspiring, especially while at work. This perspiration is rich in organic acids and the salt, sodium chloride. Acids, alkalies and salts cannot conduct electrical currents unless they are ionized. They cannot ionize unless they are dissolved in water. Therefore, the presence of absorbed moisture changes these chemicals from non-conductors to conductors.

This theory agrees well with the observed behavior of insulation resistance to drop in value as the relative humidity and ambient temperature are raised. In a unit having open windings, such as a motor, the insulation resistance will drop as the unit warms up and then rise again after the unit has been continuously operated for a sufficient length of time. This secondary rise in insulation resistance is due to the absorbed moisture being driven off by the heat losses generated in the unit.

When insulation resistance falls below a certain level, the current leakage creates high-temperature spots in the insulation. Cellulose products decompose rapidly at temperatures above 100 degrees C. The decomposed cellulose at the hot-spot leaves particles of carbon which form a low resistance path for further destructive currents. Periodic insulation resistance tests on large pieces of equipment will reveal incipient failure by a sudden drop in insulation resistance before total failure occurs.

Effect of Moisture on Conductors

Moist insulation will not only ruin itself but may destroy the conductors of the winding. Many midget or high voltage units contain windings whose wire size is #40 A.W.G. or smaller. The enamel coating on any magnet wire is not absolutely continuous. There are a random number of breaks per foot in the coating, caused by flexing during the enameling of the wire or during the assembly of the coil. Through these fissures the acid, alkali or salt solutions come in contact with the copper wire. In operation, there is a voltage difference between each turn and the adjacent turns or layers due to the induced e.m.f. and d-c resistance of the windings. The electrolysis between conductors through these solutions liberates acids and alkalies which react with the copper and sever the wire.

When very small diameter wires must be used and every possible precaution must be employed, cellulose acetate foil, a plastic product, may be used as interlayer insulation. This material is not porous, does not decompose at as low

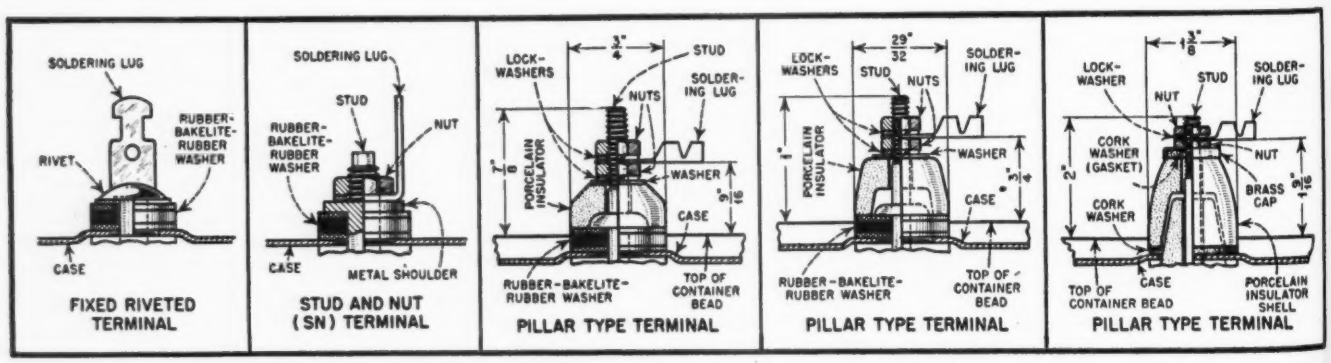

Fig. 1A Fig. 1B Fig. 1C Fig. 1D Fig. 1E

Typical terminal constructions used in sealing capacitors and transformers. (*Courtesy Aerovox Corp.*)

SEALING

This article reviews the problems encountered in radio-electronic apparatus where moisture and altitude affect operation

a temperature as paper, does not absorb moisture and will not deteriorate in the presence of mild acids and alkalies.

Effect of Dust

On transformers, resistors and other electrical units which have no moving parts, dust does not cause any trouble by itself. But the soluble materials in the dust dissolve with moisture to form a low resistance leakage path. As previously mentioned, organic dust combined with fungi and moisture is difficult to prepare against.

On small relays and vibrators for d-c power supplies which have moving contacts, the thinnest film of dust can prevent the contacts from making a low resistance metallic contact in the closed position.

Effect of Fungus

Fungus is a microscopic form of plant life whose spores are carried in the air. When these spores settle on a moist surface, they form a mold that grows and spreads over the entire surface within a few days. Moist places are required for the breeding of fungi. Organic materials such as paper, cotton, fibre and wood supply nourishment to the fungi. These species of fungi exist all over the world. In our temperate climate with its predominantly dry weather, these fungi find only a few hot humid days in summer suitable for rapid growth. In tropical climates, even those within our borders, the warm moist air is ideal for the growth of fungi. Even though all inorganic materials are used, fungus will grow on the organic dust and small dead insects that settle on the surface.

The moisture and fungi together create electrical leakage paths, causing signal attenuation or stray pickups and flashover. Essentially, the insulating properties of terminal boards, insulating strips, coil forms and sockets are lost. The weakness of the fungi is its inability to exist without moisture. Deprive it of its moisture and its ability to do damage is ended.

Effect of Atmospheric Pressure

Where equipment is expected to perform at high altitudes, the reduced atmospheric pressure will require larger air gaps and greater surface creepage to give the same minimum flashover voltage as was obtained on the ground. To design the equipment for this increased insulation would be prohibitive for high voltage equipment of over 2500 volts. By maintaining sea level pressures in the unit despite the altitude, conventional insulation practices can be followed.

For some applications it is desirable to use internal pressures, higher than atmospheric, that will conduct heat better and effectively insulate higher voltages.

For certain high voltage switches and capacitors, it is impractical to build an air gap adequate for the operating voltage. These are built with a sealed-in vacuum that does not contain any gas which can be ionized and thus support flashover.

Definition

The term "hermetically sealed" has been expressed in so many ways that it no longer covers one method or one set of performance conditions. Some of this confusion is due to the frequent changes of qualification tests which made previously satisfactory methods fail under later tests. The most general definition is this:—A hermetically sealed unit is one which is enclosed in a protective metal case to withstand at least 5 cycles of temperature change from plus 85 degrees C. to minus 55 degrees C. and at least 5 cycles of immersion in salt water at plus 85 degrees C. and 0 degrees C., without the insulation resistance falling below the minimum limit. It can be inferred from this definition that a seal which permits a very small amount of moisture to leak in would still meet these requirements.

Units which contain large amounts of insulating material, such as transformers and capacitors, frequently pass with a slim margin although their seals are imperfect. For units which must maintain internally a special gas pressure for several years, such as vacuum switches and vacuum capacitors, there must be a perfect vacuum-tight seal. For units having a normal gas pressure inside, such as vibrators and relays, the seals can be slightly less than perfect. These three grades of seals are difficult to classify because of the lack of sharply defined acceptance limits.

The objective of all hermetic sealing is to provide a perfect environment for

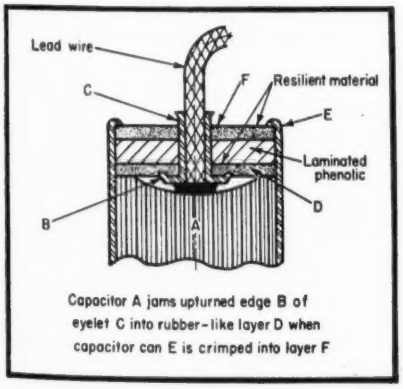

Fig. 2. Another method of using a laminated gasket on a tubular capacitor. *(Courtesy Stupakoff Corp.)*

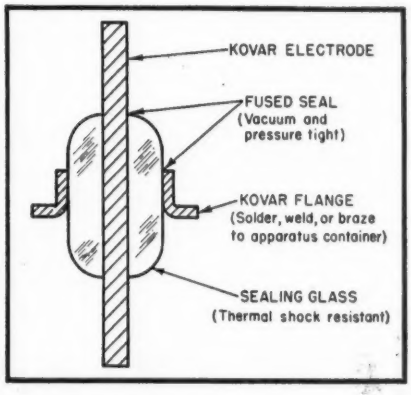

Fig. 3. Typical metal-to-glass seal. *(Courtesy Synthane Corp.)*

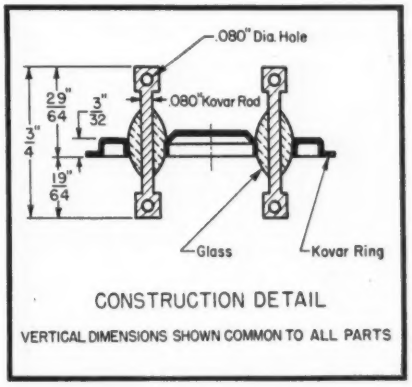

Fig. 4. Multiple conductor glass-to-metal terminal. *(Courtesy Stupakoff Corp.)*

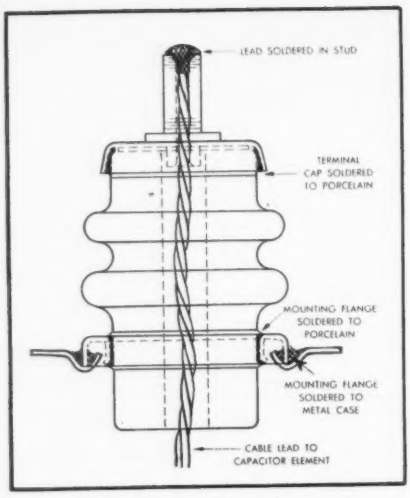

Fig. 5. Metallized solder seal.
(*Courtesy Westinghouse Electric Co.*)

the functional unit and to maintain that condition through all external changes.

Basic Construction

There are two distinct parts to the enclosure. The case construction is the less difficult since it usually involves only joining metal to metal at the seams. The insulated terminal for making electrical connections requires much more skill because a central metal conductor must be joined to an insulator which in turn is joined to the case, and each of the attachments to the insulator must be a hermetic seal.

Several drawings are shown of typical hermetically sealed units which show methods of construction.

Gasketed Terminals

In *Fig. 1* are shown several of the terminal constructions which are widely used in sealing capacitors and transformers. These are very flexible in arrangement, low in cost, and can be installed with ordinary assembly tools. All these terminals employ rubber or resilient packing material as a gasket between the metal conductor, the insulators, and the case cover. The gasket can be a single material, as shown in *Fig. 1E*, but will have a tendency to flow sideways under the clamping pressure. The rubber-bakelite-rubber washer is made by bonding sheets of rubber to both sides of a laminated phenolic. The laminated phenolic reinforces the resilient material and provides additional rigidity.

Another method of using this laminated gasket on a tubular capacitor is shown in *Fig. 2*. In the illustrations of *Fig. 1*, the clamping pressure between gasket and case is supplied by the shoulders of the center conductor or its insulator. In *Fig. 2*, the clamping pressure between gasket and case is provided by crimping or spinning over the edge of the can. A supporting shoulder in the tubular case can be rolled-in if the internal parts will not withstand the clamping pressure. After assembly, many manufacturers coat the outside diameter of the rubber-bakelite washer shown in *Fig. 1* with a waterproof varnish to reduce moisture absorption at the edges of the paper-based laminated phenolic.

The terminal shown in *Fig. 1A* is the most widely used for capacitors whose working voltage does not exceed 600 volts. Due to its small size, it heats up rapidly when a soldering iron is placed in contact with it. The use of an oversize soldering iron or a prolonged application of the iron can cause the gasket material to deteriorate and spoil the seal. Rubber and all plastics are permeable by water vapor and other gases. The rate of permeability is very low but they cannot be used for sealing special gas pressures where no replenishment of the pressure or gas can be made.

The features of each of the terminals shown in *Fig. 1* are as follows: The terminal and soldering lug in *Fig. 1A* are permanently riveted to the case, making a fixed riveted assembly with the lug in permanent position. The terminal in *Fig. 1B* is a riveted stud-type terminal with the soldering lug held in position by a nut. With this type of terminal the lug may be turned any way most convenient for wiring purposes without loosening the terminal insulator assembly. The terminal in *Fig. 1C* employs an additional steatite or porcelain insulator to provide additional creepage distance and is suitable for working voltages up to and including 2000 v.d.c.; that in *Fig. 1D*, for 3000 V.; and that in *Fig. 1E* for 7500 V.

Glass-to-Metal Seals

In *Fig. 3* is shown a fundamental arrangement of a glass-to-metal seal. Common metals, such as steel and brass,

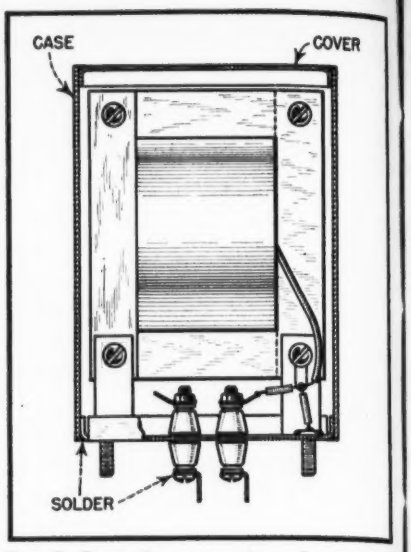

Fig. 7. Typical construction of a sealed transformer.
(*Courtesy Thordarson Elec. Mfg. Co.*)

cannot be sealed to the usual soft glasses because of the difference in coefficient of expansion. Glass will not deform and shatters when stressed beyond its tensile strength.

Beginning with the electric lamp of Edison and through the subsequent development of the vacuum tube industry, there has been the problem of sealing electrically conducting vacuum-tight leads into the glass bulb which acts both as an insulator and a vacuum container. Seven types of metal alloys suitable for use as lead-in wires are now in use. However, each requires a different sealing glass whose thermal coefficient of linear expansion matches that of the metal alloy. Since the matching of the coefficient between a particular metal alloy and its related sealing glass is never perfect, most of the alloys satisfactorily used as lead-in wires in electric lamps cannot be used as a large diameter flange as shown in *Fig. 3*. The best

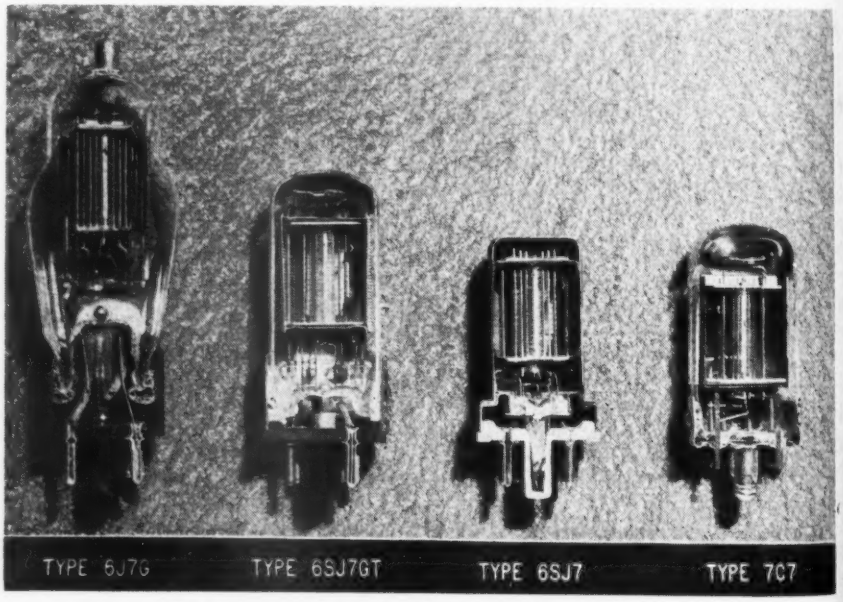

Fig. 6. Four basic constructions of electronic tubes.
(*Courtesy Sylvania Elec. Co.*)

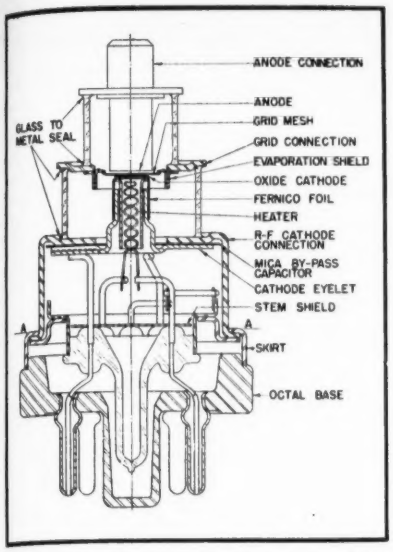

Details of General Electric type 2C40 lighthouse tube, showing method of sealing terminals

match is to use Kovar, an iron-nickel-cobalt alloy, and a Pyrex heat-resisting glass. There is a strong chemical bond at the joint of the metal and glass due to the oxide coating on the surface of the metal being dissolved into the glass while the glass is in a molten state.

The terminal shown in *Fig. 3* has a single flange. By perforating a disc to produce a series of flanges, a multiple conductor terminal can be made as shown in *Fig. 4*. This arrangement is very advantageous on small transformers and relays where a large number of terminals are required.

The metal-to-glass terminal is not always made with an external metal flange. The conductor and glass insulation can be fused directly into a cover plate made of suitable material for the unit. The metal flange is assembled to the cover of the case by a simple soldering operation.

This type of terminal makes a vacuum-tight joint and is suitable for sealing vacuum or above atmospheric pressures.

Metallized Terminals

Ceramics, like steatite and porcelain, make excellent insulators but cannot be fused directly to metal. Heavy glass pressings can be formed into terminals with barriers to provide longer surface creepage paths but would require further expensive glass working to seal on a metal mounting flange and conductor. A thin metallic coating is fused into the surface glaze of a ceramic or into the surface of the glass tubing or pressings by applying sufficient heat to the insulator to bring the glass to the softening point. The metallic coating, which is extremely thin, is built up by tinning. The thermal coefficients of expansion of the glass or ceramic, the metallized coating, the tinning and subsequent solder are not important since the metals used are so malleable that they easily conform to changes in the dimensions of the insulator.

In *Fig. 5* is shown a porcelain terminal with barriers. A metal mounting ring and terminal stud hardware have been soldered to the metallized bands to form the complete terminal. The terminal assembly is then threaded over the lead and soldered to the case. The lead is soldered at the top of the terminal stud. This hollow terminal design enables a very compact installation of the leads to be made, since useless space is not required for the slack in the leads when the cover is put on the case. By riveting as well as soldering the terminal stud to the top of the terminal insulator, the terminal can be protected from injury due to careless soldering at final assembly. A broken hollow terminal can be replaced without disassembly of the unit.

Sealing of Electronic Tubes

The tube manufacturing industry has contributed many techniques to the art of hermetical sealing. The tube engineer is concerned with securing a vacuum-tight seal. All hermetical sealing is not required to be as effective as this, but some of the methods may suit other problems.

Four basic constructions of radio receiving tubes are shown in *Fig. 6*. The views are a cross-section through the envelope and base.

In tubes 6J7G, 6SJ7GT, and 6SJ7

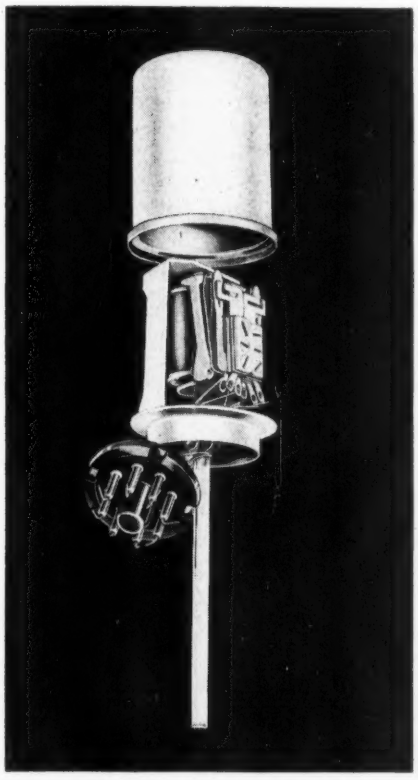

Fig. 9. Sealed relay. Air is exhausted from housing, which is filled with dry nitrogen.
(Courtesy Automatic Elec. Co.)

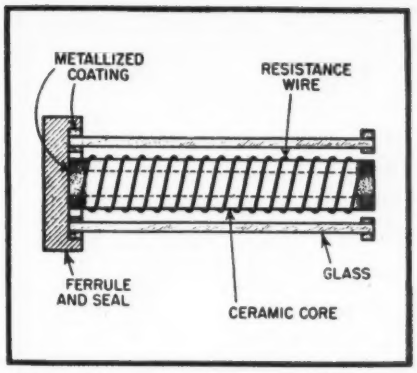

Fig. 8. New type of sealed resistor construction.

(Courtesy International Resistance Co.)

the lead-in wires are sealed into the flare by pressing the glass while it is still soft from heating, around the leads. Next, the flare, which carries the leads and the support rods, has the remaining internal tube parts added to it. The flare is then fused to the envelope. The tube is then evacuated through the stem.

The G type of tube is larger than the GT because of the envelope shape and the length of the press to seal the leads. The still smaller size of the metal (6SJ7) and lock-in (7C7) is a result of changing from a flat press to a header type of construction. Instead of the lead wires being sealed into the glass in a single plane, they are sealed in the glass header in a circular pattern. In a metal tube the glass header is sealed to a metal ring which in turn is welded to the metal envelope. The glass header permits shorter leads and reduces the capacity between leads. The spacing between leads in the glass header is much greater than with the leads through the press and this permits higher operating voltages without flash-over.

The glass header construction used in the metal tube is almost identical in construction to the multiple glass-to-metal terminal used for sealing transformers.

Transformers

Hermetic sealing of a transformer requires a new concept of case design. In most of the enclosed designs, the transformer could be mounted in any manner and the terminals brought out at any point. In *Fig. 7* is shown the typical construction of a sealed transformer. Since the case walls are soldered to the bottom and top covers and cannot carry the weight of the unit safely, brackets are provided to support the coil and core on the mounting studs. Cases are constructed of folded sheet metal with welded and soldered seams, or of a drawn case and drawn cover, heavily tin-plated to facilitate soldering.

[*Continued on page* 68]

RECENT RADIO INVENTIONS

These analyses of new patents in the radio and electronic fields describe the features of each idea and, where possible, show how they represent improvements over previous methods

Radio Receiver

★ In a patent issued on June 19, 1945, to George O. Striker, is described a superheterodyne radio receiver which may well be illustrative of the attention to details which can make future production very superior to anything that has been seen in the past. The invention consists of a careful combination of many elements including, in particular, a multiple antenna system. It is claimed that these innovations of construction allow superior input signals to be applied to the receiving circuits when the receiver is used under difficult conditions and are required to be operable over all normal broadcast and short-wave bands.

In addition to provisions for the connection of an external antenna, both a fish pole and a loop antenna are provided integral with the receiver cabinet. The loop antenna is actually a double loop so as to be suitable for either broadcast or short wave reception and is designed to be fastened to a window pane. Link coupling is provided in such a manner that the loop may be independently tuned to give best reception for a desired frequency. It is very likely that because of the large amount of compromise necessary and because of the crudeness with which many external antennas are constructed, that accurately tuned loops may often give superior reception.

The receiver described is claimed to give optimum reception in metal-enclosed conveyances, such as airplanes and railroad cars, as well as in more open locations. It is capable of operating from a-c or d-c mains as well as from self-contained batteries. It covers bands from 16 meters up. The patent is assigned to Zenith and is numbered 2,378,663.

Distortion Correction in Wave Transmission

★ When a broad-band transmission line such as a coaxial cable is used in conjunction with repeater stations to transport intelligence over long distances, it is desirable to supply power to the repeaters by means of the transmission line itself. On June 26, 1945, William R. Bennett was granted a patent on a method for minimizing distortion that may accumulate because of a mixing of the power frequency with that of the desired signal. It is assumed that 60 cycle power is carried over the line and a fraction of it successively used at each repeater station to supply plate and filament voltage. The present invention suggests a phase shift of this 60 cycle power at each repeater station so that a given point on the transmitted signal wave will at various times be exposed to different phases of the power wave. This causes a partial cancellation of any effect which the power wave might otherwise impress on the signal.

Because mixing produces harmonics as well as simple difference frequencies, it is pointed out in the patent it is not enough simply to reverse the power phase midway along the line. It is stated that optimum cancellation will be obtained if the phase shift at each repeater station is $360/n$ degrees where n is the number of repeater stations. The patent is assigned to Bell Telephone Laboratories and is number 2,379,211.

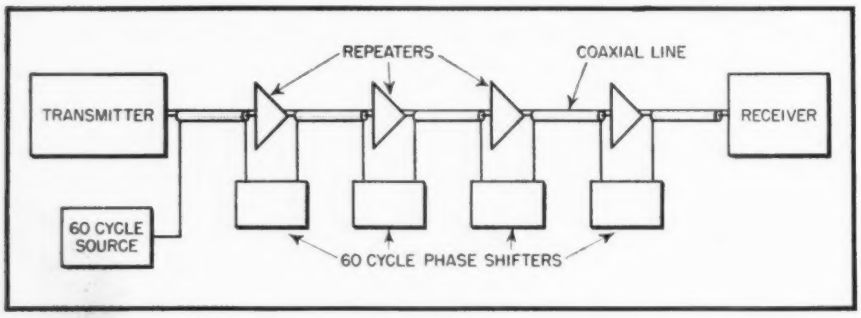

Patent No. 2,379,211

Antenna System

★ George H. Brown was issued a patent on April 24, 1945, which covers an antenna to which two distinct connections are provided. The use of one causes energy to be radiated with one polarization while the other connection makes the radiation effective in a polarization plane that is rotated through 90 degrees. The use of such polarized antennas for the selective reception and rejection of intelligences sent with the same carrier frequency is unfortunately limited because polarization is often changed by incidental reflections during transit, but over certain links one type of polarization may be superior to another and it is at least a convenience to be able to change easily a given antenna so that it is more sensitive either to vertically or horizontally polarized radio waves.

The present invention constitutes four quarter-wave radiators which are situated in a manner about as shown in the drawing. The directionality of such an antenna is not high, being in effect much the same as that of a center-fed half-wave antenna, which actually is what any selected pair of the quarter-wave radiators taken together constitute. High directionality can, however, be obtained by utilizing an array of such antennas arranged in the usual way so that cancellation occurs in all but the desired direction. This can be made to eliminate from consideration those directions in which one or more of the dipoles are naturally ineffective

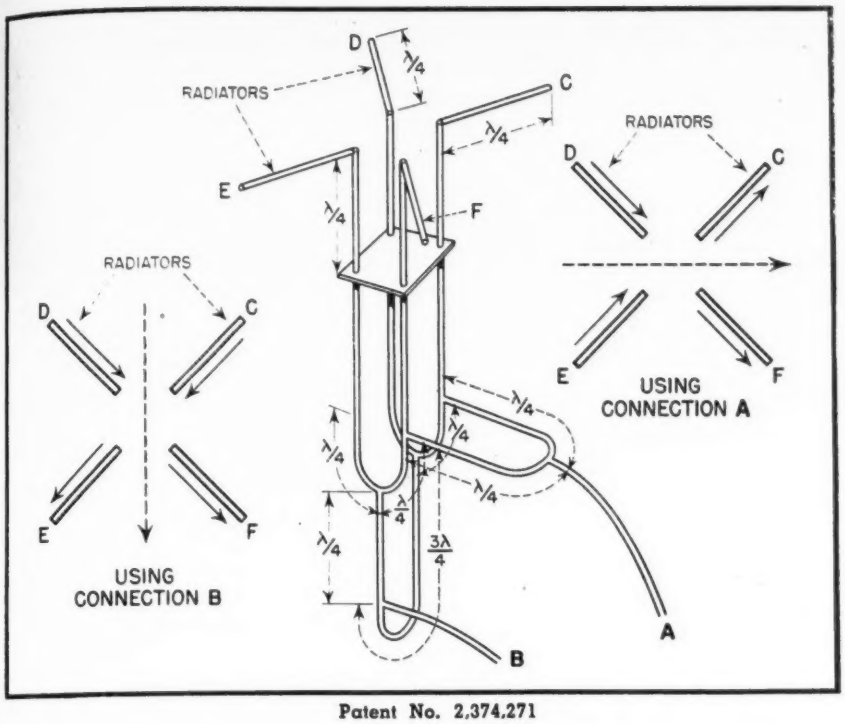

Patent No. 2,374,271

and hence assure that the whole pattern is uniformly polarized.

To visualize the principle of operation, let it first be considered that radio-frequency power is inserted into connection *A* and connection *B* is left unattached to anything. As in any alternating current connection, a charge flows in and out of *A* and, during the time between reversals of polarity, is able to move a distance equal to one wavelength. Specifically, a charge is made to move back and forth along radiators *C* and *F* and, since these radiators are equally distant from the feed, the charge in the two moves in and out in unison. The charge in radiators *D* and *E*, on the other hand, moves out when that in *C* and *F* moves in because an additional half-wavelength of transmission line must be traversed before energy from the feed reaches those radiators. The net result is that when connection *A* is used, currents flow in the radiators so that at any instant they are directed as shown in the properly labeled auxiliary view. Alternatively, they are all moving in the opposite direction, which of course amounts to the same thing at a different point in the cycle. Radiation from each radiator has its electric field oriented in the same direction as the currents move and, since all the currents are equal, the total field is determined as a vector sum. In the auxiliary view for connection *A*, all the current vectors are pointing essentially to the right, and the up-down component of any one is just cancelled by a down-up component in another. The total field is therefore oriented like the broken arrow shown.

When feed *B* is used a similar argument may be made to show that the radiation is polarized the other way. Radiators *E* and *F* are now fed in unison and *C* and *D* encounter a 180-degree phase shift. The radiators therefore have current flows like those shown in the other auxiliary diagram and produce an average current which is again shown by a broken arrow which, however, is now oriented differently.

The patent, No. 2,374,271, is assigned to RCA.

Electric Circuits

★ Joseph C. Frommer received a patent on August 7, 1945, for the circuit of a device which is designed to detect relatively small changes in capacitance. The letter of patent indicates that the device is particularly suitable for assembly lines and other places where a change in capacitance is utilized to indicate some fault or abnormal condition. The circuit, shown in the accompanying diagram, is particularly designed to make the indication independent of other capacitance changes in or near the apparatus, and to balance out fixed capacity so that a given change is equally well observed in the presence of a large fixed value.

The system consists of obtaining a high frequency voltage at the plate of an electron-coupled oscillator and connecting that voltage in series through a coil (linked to a rectifier) and the capacitance whose variation it is wished to observe. The circuit is completed by the ground connection between one side of the unknown capacitance and the ground connection of the electron-coupled oscillator. A variation in the unknown capacitance causes an impedance change in this series circuit and, consequently, changes the strength of the current which is linked to the rectifier and indicating meter or output circuit.

In order to cancel out unwanted steady capacity indication, the series circuit to which we have just referred also contains a vacuum tube which, with its external circuits, is able to apply signals of any desired and fixed amount but in opposite phase, so that zero on the indicating meter is surpassed only by capacitance in excess of a given amount. A doubly shielded cable is connected to ground and to a proper point in the series tube circuit so that capacitance changes in the lead to the unknown capacitance are compensated for. Other similar features are also incorporated into the circuit.

The patent, No. 2,381,155, is assigned to the Rolling and Engraving Mills, Inc.

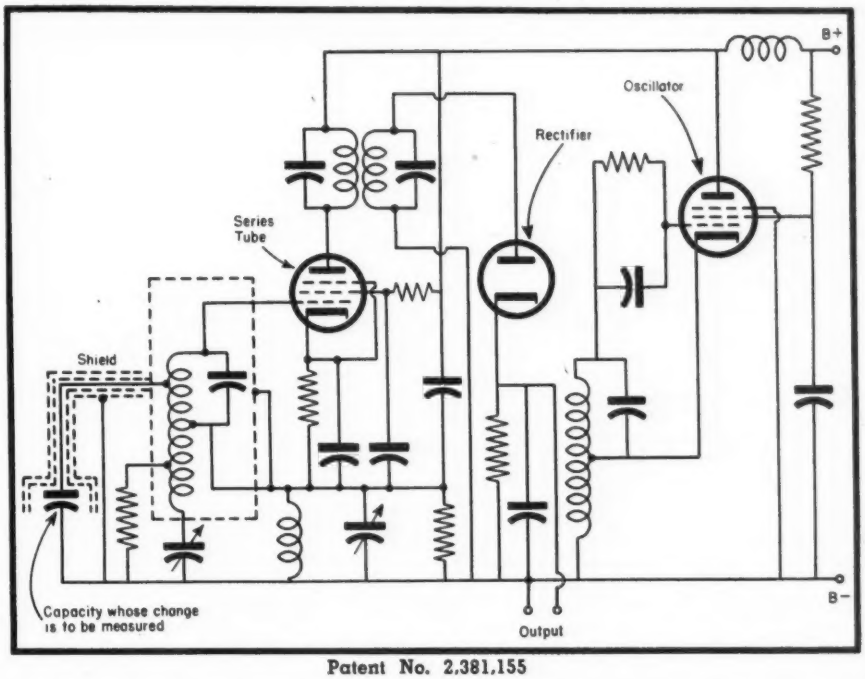

Patent No. 2,381,155

Radio Transmitter

★ In a patent granted August 7, 1945, Thomas Henry Price of Chelmsford, England, shows a system for using low power level phase modulation signals so that when they are amplified in a pair of high power transmitting tubes, a corresponding amplitude modulated carrier becomes available for use in supplying power to an antenna. It is claimed that the system allows more efficient use of the high power transmitting tubes than would otherwise be possible because the voltage swings of the tube grids are always the same amplitude and the phase shifts change only the power transfer into the plate circuits. This allows full class C operation.

As it is shown in the letter of patent, the actual circuit used is moderately complex but the essential method of its operation without including all the features necessary to achieve highest efficiency may be described with less difficulty. Such a discussion is perhaps enough to give some evaluation of the invention although it should not be used to judge the claim of high efficiency.

As is shown in the accompanying block diagram a low powered continuous wave r-f signal is first produced and split into two parts. Its magnitude and phase are arbitrarily represented by a vector pointing to the right and 10 degrees above the horizontal. One part of the original c-w signal is fed directly into a phase modulation circuit and the other part is subjected to a constant phase shift of 160 degrees before being inserted into a phase modulator. Because of the fixed phase shift inserted into one branch of the circuit, two identical phase modulators receive r-f input signals whose vector representation is like that shown in the drawing. Both phase modulators receive the audio modulation and shift the phase of their respective r-f energies in accordance with that modulation signal. Specifically, the vectors representing the r-f voltages are made to change about their mean positions while remaining always within 10 degrees of that angle. After amplification, the phase modulation signals, now at high voltage, are again each shifted 90 degrees in phase by being allowed to pass through a quarter-wave section. When the waves are then combined much of the voltage is cancelled, but at little power loss because the quarter-wave section has so transformed the impedance that the cancellation is equivalent to a reactive reflection of energy. The portion of the voltage which does not cancel produces a voltage in the antenna that varies in amplitude as shown and in accordance with the original modulation.

The patent, which is assigned to RCA, is number 2,381,181.

Signaling System

★ In a patent issued to Lee Hollingsworth on August 14, 1945, the distortion of an amplitude modulated broadcast transmission which arises from selective and variable interference, due to reflections from the Heaviside layer, is considered. Because the territory served by a broadcast station may be divided into two parts served respectively by energy traveling from the transmitter to the receiver, either directly or by the way of a reflection from the Heaviside layer, and because the best modulation percentage for the two service areas is different, it is proposed that separate transmitting antennas be used for transmission into the two areas. The one used for the ground wave is to have greater gain than is normal and is to be restricted to low angle transmission. The sky wave energy, on the other hand, is fed to an antenna whose pattern is tilted upward so as to make its major contribution to more distant areas of reception.

The reason that a lower percentage modulation is desired for sky wave reception depends upon the fact that radio energy reaching a point over two paths may at times be cancelled out because the effective length of one path is a half-wave length longer than that of the other. Specifically, it may happen that at a given receiving location, two transmission paths may differ in length by a distance equal to a half-wave length of the carried frequency without causing interference effects on the sidebands which are of a sensibly different wave length. The inverse case, in which one sideband is removed by interference effects while still leaving the carrier and the other sideband, is not serious since the resulting distortion is relatively small. However, when the carrier is reduced and the sidebands are left at high level, a condition of more than 100% modulation is obtained and extreme distortion results. To overcome this, it is desirable to keep down the percentage modulation of the signal sent to areas where this can happen.

The present invention shows circuits for obtaining suitable signals to be applied to the two antennas. Both must stem from the same r-f source, and the one limited to 40% modulation is preferably arranged so that 40% is only a limitation which is smoothly applied when the intelligence would otherwise demand a higher percentage.

The patent, number 2,382,567, is assigned to RCA.

[*Continued on page* 64]

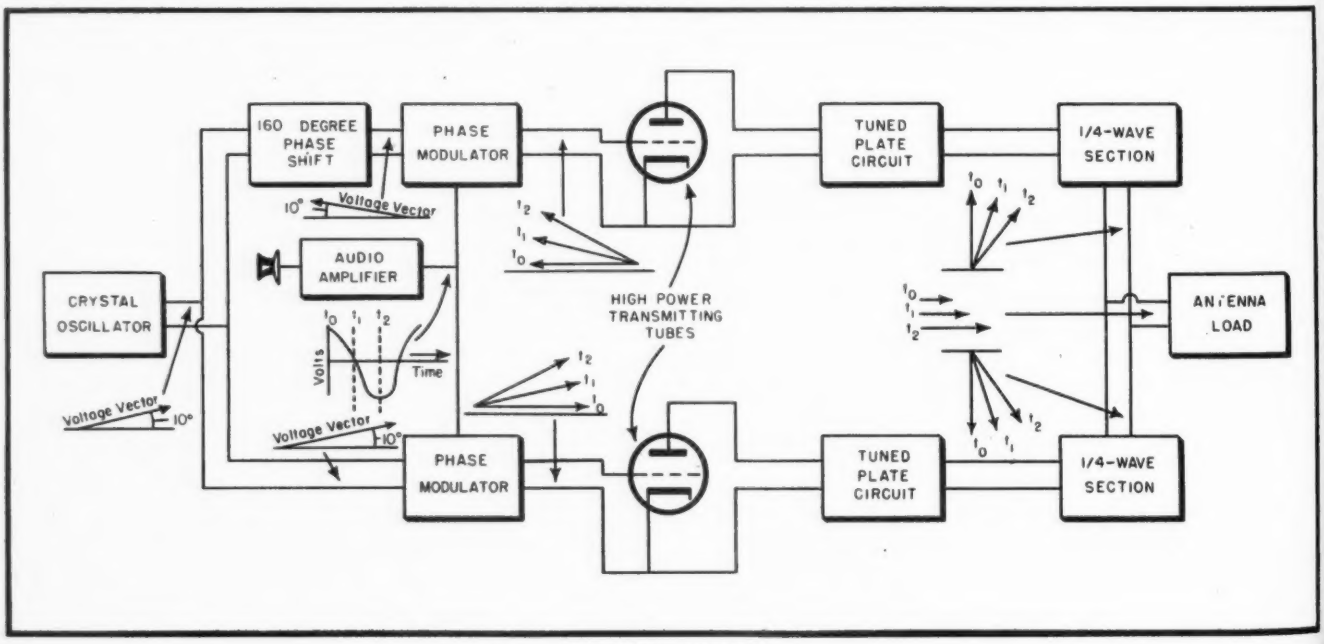

Patent No. 2,381,181

RADIO DESIGN WORKSHEET

NO. 42 — SOME NOTES ON AUTOMATIC VOLUME CONTROL; PARALLEL RESONANCE

SOME NOTES ON AUTOMATIC VOLUME CONTROL

When the initial automatic volume control circuits made their appearance, three element rectifier tubes were commonly used to supply a-v-c bias. These tubes were commonly biased to approximate cutoff. Since the applied voltages were usually relatively small, the a-v-c tube operated over the parabolic portion of its characteristic. Thus the rectified d.c. in the load circuit was approximately proportional to the square of the applied voltage. As a result, if one input signal were twice as large as another, the rectified d.c. it would produce in the load circuit of the a-v-c rectifier, would be four times as great as that of the original signal. As a result the voltage fed back to the control grids of controlled tubes would be four times as great as for the original signal. That is, if a signal of 0.1 millivolt produced a bias voltage of one volt then a signal of 0.2 millivolt would produce a bias voltage of 4 volts. Obviously this is not a satisfactory arrangement. However, by proper choice of initial bias and the number of tubes controlled, such circuits were able to perform quite acceptably. *Fig. 1* illustrates such a circuit arrangement.

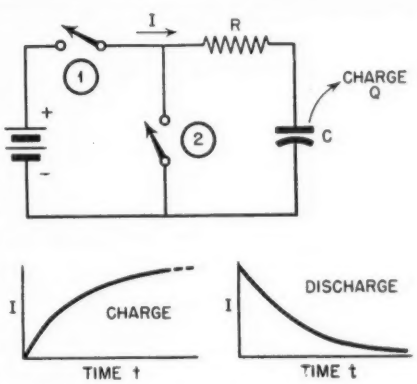

Figure 2

In order to understand the significance of the constants of a-v-c circuits, refer to *Fig. 2,* in which a capacitor is charged through a resistor with a suddenly applied d-c voltage and then discharged through the same resistance. If switch *1* is closed and switch *2* is open, we have:

$$E = RI + \frac{Q}{C} = R\frac{dQ}{dt} + \frac{Q}{C}$$

Since I is a function of time and decreases in magnitude as the capacitor becomes charged:

$$\frac{dQ}{dt} + \frac{Q}{CR} = \frac{E}{R}$$

$$Q\epsilon^{\frac{t}{RC}} = \int \epsilon^{\frac{t}{RC}} \frac{E}{R} dt + K$$

$$= \left(\frac{E}{R} \times RC \times \epsilon^{\frac{t}{RC}}\right) + K$$

$$= CE\epsilon^{\frac{t}{RC}} + K$$

and:

$$Q = CE + K\epsilon^{-\frac{t}{RC}} = Q_M + K\epsilon^{-\frac{t}{RC}}$$

When

$$t = o,\ Q = o \text{ and } K = -Q$$

Whence:

$$Q = Q_M\,(1 - \epsilon^{\frac{t}{RC}})$$

$$I = \frac{dQ}{dt} = \frac{Q}{RC}\epsilon^{-\frac{t}{RC}}$$

$$Q_M = CE$$

and:

$$I = \frac{E}{R}\epsilon^{-\frac{t}{RC}}$$

If switch *1* is opened and switch *2* is closed, the resulting current by reasoning similar to the above will be:

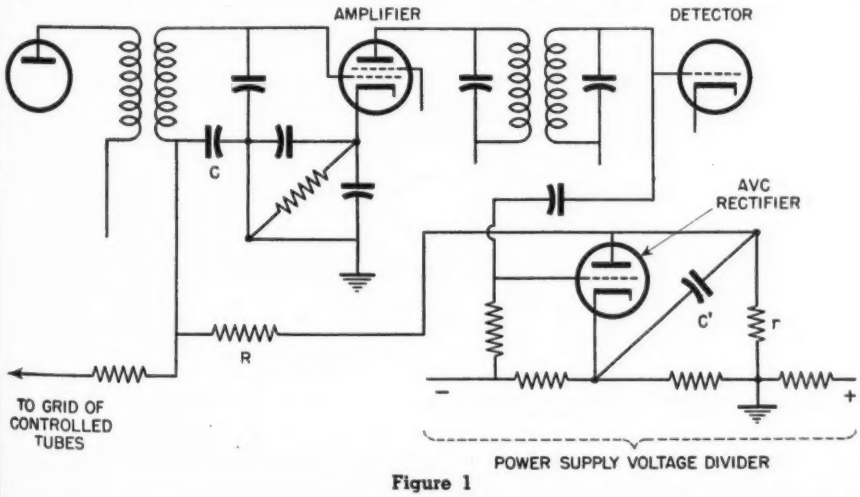

Figure 1

$$I = -\frac{E}{R}\epsilon^{-\frac{t}{RC}}$$

The quantity RC is known as the time constant. It is obviously the time required for the capacitor to change to 63% of its maximum or for the charge to fall to 37% of its maximum.

Applying this to *Fig. 1* we find the time constant of this circuit to be:

$$CR + C'R = \text{time constant}$$

Common values for these constants are:

$$C' = C = 0.25\ \mu f$$
$$R = 0.1 \text{ megohm}$$
$$r = 0.3 \text{ megohm}$$

$$CR + C'r = \frac{.25}{10^6} \times 10^5 + \frac{.25}{10^6} \times 3 \times 10^5 = 0.1 \text{ second}$$

This is a fairly common value for

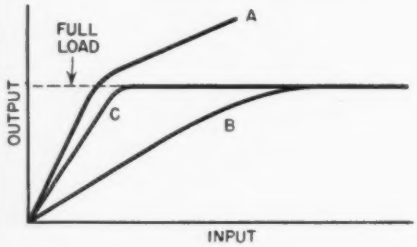

Figure 3

the time constant and means that 63% of the rectified a-v-c voltage is applied to the grids 0.1 second after the signal impinges on the antenna. Likewise, when the applied voltage drops, the gain comes up to 63% of maximum in 0.1 second.

By proper choice of load circuit the triode a-v-c rectifier can be made to approach linearity so that the voltage fed back through the filters to the controlled amplifier grids is about proportional to the incident carrier voltage and independent of percentage modulation. However, a diode a-v-c ceiver employing a.v.c. from a diode erally used for this purpose.

Fig. 3 shows the overload on input-output characteristics of a radio receiver employing a. v. c. from a diode rectifier compared to a receiver with no a.v.c. Curve *A* of *Fig. 3* illustrates the overload characteristic of a receiver without a.v.c. and set for maximum sensitivity. If a.v.c. is applied, increases in incident signal carrier will tend to reduce the receiver sensitivity in proportion to the strength of the carrier. This is shown by curve *B* of *Fig. 3*. As a result the output will not rise as fast as that of the receiver with no a.v.c.

A more desirable characteristic would be a combination of curve *A* and curve *B*; that is, one that would coincide with curve *A* up to the value of full load and then flatten off at this point as does curve *B*. This is sometimes accomplished by means of delayed

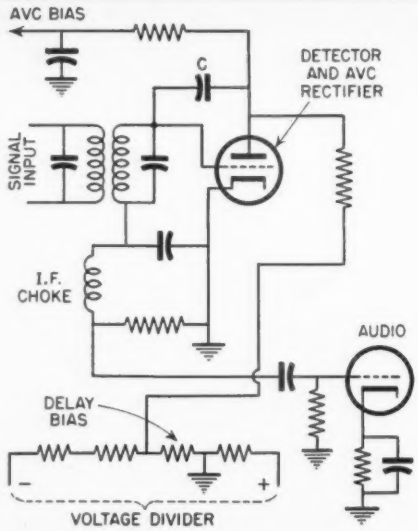

Figure 4

a.v.c. This circuit which is illustrated in *Fig. 4* prevents a.v.c. from acting until a definite input is achieved and permitting it to act at all greater inputs. The characteristic of such a circuit is shown by curve *C* of *Fig. 3*.

In the circuit of *Fig. 4*, a triode is used for detector and a-v-c rectifier. The grid-cathode circuit of the triode functions as the detector and the plate-cathode circuit of the triode functions as a-v-c rectifier fed by coupling capacitor *C*. A sufficient negative delay bias is used in the rectifier circuit to permit fully loading the receiver before a-v-c action starts. Of course a single diode may be and has been used for both a-v-c rectifier and detector in common, but improved performance results if separate diode circuits are used. This is particularly true if delayed a.v.c. is used.

If sufficient input is impressed on the receiver the a.v.c. can be overloaded. When this occurs the output will rise above the full load value

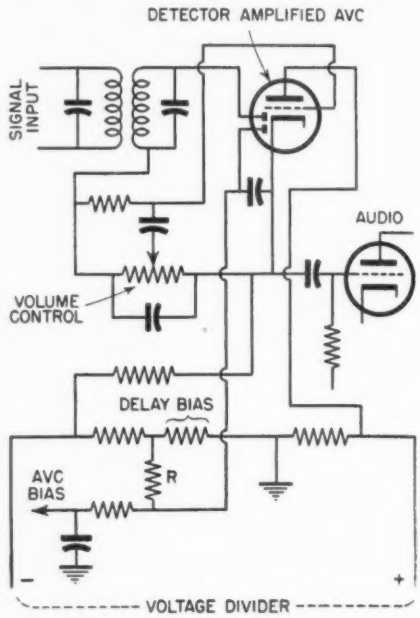

Figure 5

shown in *Fig. 3*. This has been overcome by the use of amplified a.v.c. A circuit employing amplified a.v.c. and using a double diode triode for the purpose is illustrated in *Fig. 5*. With such a circuit the input required to overload the a-v-c system is increased by an amount equal to the amplification of the triode. In *Fig. 5*, the diode detector circuit is conventional. The grid of the triode is fed from the detector load circuit through an isolating resistor and resistor *R* is the load circuit of the a-v-c rectifier which feeds the a.v.c. bias back to the amplifier grids.

PARALLEL RESONANCE

Let it be required to find the frequency of unity power factor (i.e. resonant frequency) and the impedance *Z* looking into the parallel resonant circuit of *Fig. 6* at the frequency of unity power factor.

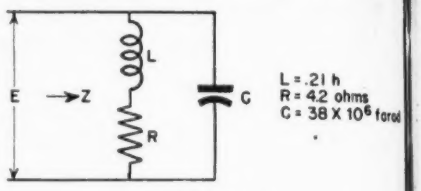

Figure 6

Fig. 7 represents the vector relationships of the currents and voltages of the circuit of *Fig. 6*.

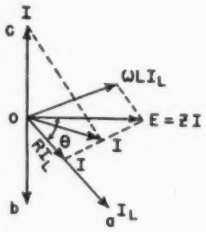

Figure 7

$$I_1 = \frac{E}{\sqrt{R^2+\omega^2L^2}}$$

$$I_C = -\frac{E}{\frac{1}{\omega C}} = -\omega CE$$

$$ba = I_L \cos\theta = \frac{E}{\sqrt{R^2+\omega^2L^2}} \times \frac{R}{\sqrt{R^2+\omega^2L^2}} = \frac{ER}{R^2+\omega^2L^2}$$

$$ob = I_L \sin\theta = \frac{E}{\sqrt{R^2+\omega^2L^2}} \times \frac{\omega L}{\sqrt{R^2+\omega^2L^2}} = \frac{\omega LE}{R^2+\omega^2L^2}$$

$$I_C - I_L \sin\theta = \omega CE - \frac{\omega LE}{R^2+\omega^2L^2} = I'_C$$

$$I = \sqrt{I_C^2 + I_L^2} = E\sqrt{\left(\frac{R}{R^2+\omega^2L^2}\right)^2 + \left(\omega C - \frac{\omega L}{R^2+\omega^2L^2}\right)^2}$$

At unity power factor I will be in phase with E, whence:

$$\omega C = \frac{\omega L}{R^2+\omega^2L^2}$$

And:

$$I_R = \frac{ER}{R^2+\omega^2L^2}$$

$$\omega CR^2 + \omega^3 LC = \omega L$$

$$\omega \neq 0$$

Therefore:

$$CR^2 + \omega^2L^2C = L$$

$$\omega = \sqrt{\frac{L - CR^2}{L^2C}}$$

$$f = \frac{\omega}{2\pi} = \frac{1}{2\pi}\sqrt{\frac{10^6}{38 \times .21} - \frac{4.2^2}{.21^2}} = 56.2 \text{ Cycles}$$

$$Z = \frac{R^2+\omega^2L^2}{R} = 1310 \text{ Ohms}$$

This Month

FM VS. AM TESTS

Frequency modulation and amplitude modulation radio systems were tested simultaneously under identical operating conditions, utilizing equipment of comparable engineering specifications in experiments concluded recently by the Atchison, Topeka & Santa Fe Railway Company and the Farnsworth Television & Radio Corporation of Fort Wayne, Indiana.

The tests, conducted in the Santa Fe Corwith yards on Chicago's south side, indicated that both FM and AM systems are capable of rendering satisfactory service in railroad operation, according to engineers in charge of the experiments. Both systems, it was pointed out, have certain inherent advantages, and a choice would depend on the economic, installation, operation and maintenance factors involved in individual projects.

The equipment tested for both AM and FM employed a new development called the "auto pulse" checking system, in which a small light flashes in the locomotive cab every few seconds when the engine is in operating range of another radio-equipped unit. Because of its safety factor, it was pointed out, this new check system will have many applications in the railway field. The pulse technique employed in this system is an adaptation of a wartime identification development whereby friendly aircraft can automatically identify each other.

S. D. Epstein, G-E electronics engineer, places a radio proximity fuze in the nose of an aircraft rocket. Heart of the fuze is a vacuum tube which sends out electromagnetic waves that are reflected back to the tube by any target which gives radio reflection, causing the projectile to burst at a distance where the most damage will be done.

OPA CABINET PRICING

Pricing cabinets for manufacturers of wood radio cabinets were announced today by the Office of Price Administration. The cabinets will be used in household radios and electrical phonographs, which will soon be returning to the civilian market.

An order, effective October 16, 1945, bases manufacturers' ceiling prices on the prices they charged for cabinets delivered to radio set manufacturers between July 1, 1941, and October 31, 1941.

To determine their ceiling prices for the same models, manufacturers apply a price increase factor of 18 per cent to their 1941 prices for models delivered between July 1 and October 31, 1941. If a cabinet was not delivered during this period, but has an established ceiling under the consumer durable goods regulation, an increase factor of 12 per cent may be applied to each price to determine the new ceiling price. In line with OPA's reconversion policy, these increase factors reflect lawful increases in material prices and basic wage rate schedules since October 1941, together with the industry's average 1936-39 percentage margin over total costs.

The following pricing methods are provided for new models of cabinets and for the output of new manufacturers:

(1) For new models comparable to models on which ceiling prices are fixed by the order, an automatic pricing technique is established. The manufacturer figures his own ceiling price by computing his unit direct cost for the comparable model and for the new model, based on current costs, and applying the mark-up he would realize on the comparable model.

(2) For new models not comparable to other models with established maximum prices, and for all models produced by new manufacturers, ceiling prices must be obtained by application to OPA. The agency-approved prices will be in line with the price level set for other models under the order.

OPA pointed out that no provision is made for resale prices, since the greater part of all cabinet production is sold directly to radio set manufacturers. A survey of the radio industry now is in progress, however, to determine the increase factor to be applied to this group. Price increases allowed for cabinet manufacturers will be included in the increased materials costs used to compute the increase factor for the radio set industry.

The pricing technique for comparable models, by permitting manufacturers to determine their own ceiling prices, does away with the loss of time involved in securing positive approval in each specific case. Unit direct costs for new and comparable models must be reported to OPA, together with the resulting ceiling prices within five days after entering into a sales contract. Sales may be made immediately at the reported prices, but OPA reserves the right to adjust these prices later. No adjustments will be retroactive if the manufacturer has complied with the order.

Manufacturers who are required to apply to OPA for ceiling prices may not sell the models affected until they have received specific authorization from the agency.

Today's order, OPA added, provides for the establishment of ceiling prices to classes of purchasers other than radio set manufacturers. It also authorizes the agency to act on its own initiative in setting ceiling prices when manufacturers fail to make application or to file complete records.

(Order No. 2 under Secton 1499.159e of Maximum Price Regulation 188—Maximum

Prices for Specified Building Materials and Consumer Goods Other Than Apparel—effective October 16, 1945.)

AMATEUR TRANSMITTER CONTEST

The 1st Annual All Amateur Transmitter Contest is being inaugurated by Taylor Tubes, Inc., of Chicago, Illinois, together with nine other radio-component manufacturer-participants as an expression of appreciation for the outstanding work done by the thousands of servicemen in the Communications Branches of the military, and the many amateur radio operators, or "hams".

The prizes consist of two transmitters, designed by the contestants, complete from microphone to antenna post, plus $1125 in Victory Bonds, furnished by the participating manufacturers. Two prizes will be awarded: one in final power input classification up to 250 watts, and the other in power input classification of from 251 watts to 1,000 watts.

The participating radio-component manufacturers, who are donating the $2250 in Victory Bonds ($1125 to the winner in each class) are: Aerovox Corp., New Bedford, Mass.; American Phenolic Corp., Chicago, Ill.; Barker & Williamson, Upper Darby, Pa.; Bliley Electric Co., Erie, Pa.; Gothard Mfg. Co., Springfield, Ill.; International Resistance Co.; Philadelphia, Pa.; E. F. Johnson Co., Waseka, Minn.; Solar Mfg. Corp., New York, N. Y.; and United Transformer Corp., New York, N. Y.

Eight well-known men in radio are acting as judges. They are: Fred Schnell, W9UZ (Former Communications Manager of ARRL and now Chief of Radio Dep't., Chicago Police), Oliver Read, W9ETI (Editor, *Radio News*), Cyrus T. Reed, W9AA (Former Asst. Secretary ARRL), John H. Potts (Editor *CQ* and RADIO), Lewis Winner (Editor, *Communications*), Frank J. Hajek, W9ECA (President, Taylor Tubes, Inc.), Rex Munger, W9LIP (Sales Manager, Taylor Tubes, Inc.), and Karl A. Kopetzky, W9QEA (Former Managing Editor, *Radio News*).

Official Entry Blanks, which must accompany every entry, are available from any radio parts jobber or distributor. The contest opens November 1, 1945 and will close February 15, 1946. The contest is being managed by Magazines, Incorporated, of Chicago, Illinois.

Personal Mention

RIEDEL RESIGNS

★ A veteran merchandiser in the radio industry of radio receiving sets, speakers and tubes, Edgar S. Riedel, for 13 years general sales manager of the Receiving Tube Division of Raytheon Manufacturing Company, Newton, Massachusetts, announced his resignation from the company today. "Eddie" Riedel is a popular nationally-known pioneer in the field of radio distribution, advertising and sales. He was one of the nine original organizers of the Radio Manufacturers' Association in the Sherman Hotel at Chicago in 1923. He has been engaged in Radio Merchandising since the first day of broadcasting, when he manufactured Thorola sets, parts and speakers.

Edgar S. Riedel

During the first four years of Broadcasting in radio he manufactured and marketed over two million Thorola and Thorophone horn-type loudspeakers, leading the speaker industry.

During the "B" eliminator days for Raytheon, as general sales manager, he was active in licensing the 45 manufacturers who built their "B" eliminators around the Raytheon BH gaseous rectifier, which at that time was Raytheon's only product. This was the first step toward a-c radio sets. After several million of these BH tubes were on the market in "B" eliminators, Eddie established Raytheon's first replacement sales policy through jobbers whose outgrowth is Raytheon's present replacement tube distributors.

During the period that National Carbon had an option to buy Raytheon and handled Raytheon tube sales marketing 4 Pillar radio tubes under Everready-Raytheon's name, Eddie Riedel resigned and accepted the position as Vice-President and General Sales Manager of Utah Radio Products Company, Chicago, and again made an outstanding merchandising success of Utah dynamic speakers. In 1933 National Carbon Company canceled their contract with Raytheon giving up their option and receiving tube sales were turned back to Raytheon; Eddie Riedel was again induced to rejoin Raytheon as their General Sales Manager, which position he has held until his present resignation.

The new Raytheon replacement tube sales plan to be announced shortly to the parts and tube industry is one of the most revolutionary tube merchandising plans ever to be offered the tube distributors and service dealers in radio tube history, and is the crystallization of Eddie Riedel's dream for the past three years, of something to offer the parts distributors and service-dealers on tubes that was entirely new, helpful and constructive in post-war tube merchandising that would elevate their business and protect them from outside interests cutting into the reliable radio-service profession in the new era of electronics.

Before his radio days Ed Riedel was for several years in charge of national accounts and manufacturers' sales for B. F. Goodrich Rubber Company, Akron, Ohio. During his high school days, he was one of Oak Park High School's greatest athletes. His straight form of hurdling, new at the time, enabled him to break the world's interscholastic record. During each of his four years he was captain of all four major sport teams winning 16 Oak Park monograms. In his freshman year, when Oak Park won the Central States championship of the West in basketball, he was honored as the greatest prep player in the middle West. He pitched Oak Park to many baseball victories, and in his last year of high school he won the Cook County tennis championship. In his freshman year at the University of Chicago, he set a new world's record in the Olympic tryouts to represent the United States in the high hurdles at the Stockholm Olympics. For eleven years following college, as a member of the Chicago Athletic Association track team, he consistently won in the National track championships in the high hurdles.

During the first World War he served as a United States Naval officer. At the time of his discharge, he held the rank of Lieutenant Senior Grade. He specialized in navigation and studied at Annapolis.

E. S. Riedel will announce his business plans in the near future.

ELECTRONIC MECHANICS INC. CELEBRATES 10TH ANNIVERSARY

★ D. E. Replogle, founder and president of Electronic Mechanics Inc., manufacturers of Mykroy—glass bonded mica ceramic—is a pioneer in the twin fields of radio and electronics. His long, successful career which began in 1916 when he erected a two kilowatt wireless sending station at Noorvik, Alaska, continues to the present day.

Electronic Mechanics Inc., formed in 1935, is a continuation of the Communications Products Company of New York City. Its success and tremendous expansion in the past decade attests to the administrative ability of its founder and the high quality of its product Mykroy.

D. E. Replogle

Electronic Mechanics Inc. is celebrating a decade of service to the ever-growing electronic industry. It has produced several informative engineering bulletins on Mykroy showing the many uses to which it can be put. Those wishing copies are invited to write directly to Electronic Mechanics Inc., 76-82 Clifton Blvd., Clifton, N. J.

BROWNING APPOINTS SPINDELL

★ At a company meeting held October 5, 1945, it was announced that Freeman A. Spindell had been appointed Chief Engineer of Browning Laboratories, Inc. Mr. Spindell was graduated from Tufts College

Engineering School in 1938, following which he spent three years as an instructor of electronics. He became associated with the Browning Laboratories in the Spring of 1941, where he has devoted his time to the design of radar and radar test equipment. Mr. Spindell is married and lives in Tyngsboro, Mass.

A. O. Seehafer

★ A. O. Seehafer has been appointed general sales manager of Russell Electric Co., Chicago, manufacturers of Ballentine record changer motors, phonograph drives, and other fractional horsepower electric motors.

A 1930 alumnus of Northwestern University's engineering school, Seehafer received his M.S. in physics in 1931, continued his research in electrical physics on a fellowship in Europe for one year, served for a time on the faculty at his alma mater, and then went into sales development work with Container Corporation. He has been with Russell Electric since 1944, and was instrumental in handling many of Russell's war contracts. He is a member of Tau Beta Pi, honorary engineering fraternity, and Sigma Xi, honorary scientific fraternity.

A. O. Seehafer

He, his wife, and their two children live in one of Chicago's North Shore suburbs, Wilmette. His hobby, when he can spare the time, is skiing, and he has sampled nearly all the great ski courses in this country and Europe.

Sculptor Charles Bradley Warren of Pittsburgh puts the finishing touches on the statue to be presented by the radio manufacturing industry to the broadcasters of America "in recognition of a quarter century of public service by the broadcasters and for their contribution to world peace and harmony." Presentation of the statue, which will be on permanent display in the Washington headquarters of the National Association of Broadcasters, highlighted the observance of National Radio Week (Nov. 4-10). R. C. Cosgrove, president of the RMA, represented nearly 300 radio manufacturing companies in giving the statue to Justin Miller, president of NAB, representing both the networks and individual stations.

NEW RCA APPOINTMENTS

Appointment of J. B. Coleman as Assistant Director of Engineering for the RCA Victor Division and the naming of M. C. Batsel as Chief Engineer of the Engineering Products have been announced by D. F. Schmit, Director of Engineering for the RCA Victor Division.

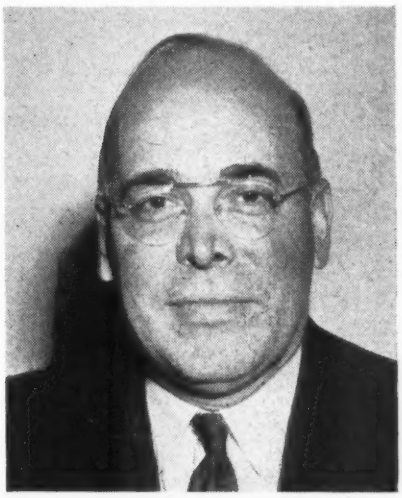

J. B. Coleman

Mr. Coleman, who will make his headquarters at the company's home office in Camden, N. J., joined RCA in 1930. He progressed through the Engineering Division holding a series of responsible positions until 1939 when he was appointed Chief Engineer of the Engineering Products Department, a position he held until his new assignment.

Mr. Batsel is widely known in the radio and motion picture industry. He became associated with RCA in 1929. Previous to his new assignment, Mr. Batsel was Chief Engineer at the RCA Victor plant in Indianapolis, Ind.

WU PLANS RADIO RELAY SYSTEM

A plan to establish super-high frequency radio relay systems with towers about 30 miles apart between the major cities of the United States during the next seven years was announced today by A. N. Williams, President of the Western Union Telegraph Company.

Radio relay systems ultimately will replace many of the familiar pole lines and hundreds of thousands of miles of wire in the 2,300,000-mile telegraph network, Mr. Williams predicted, but no lines will be removed on this account until an established radio system along the route has proved satisfactory, government approval is obtained and existing contracts permit.

The use of radio relay system will provide a larger number of channels than are now available for the handling of telegraph traffic and also will provide circuits for new uses such as Telefax (facsimile) operation and for special leased networks required by large users of the telegraph.

In its first major move to use radio relays, the telegraph company has applied to the FCC for permission to establish experi-

[*Continued on page 67*]

New Products

ULTRA HIGH-SPEED RELAY

The new Stevens-Arnold Millisec relay is a hermetically sealed sensitive relay capable of speeds up to 1000 operations per second.

The basic design of the moving elements is quite different from conventional relay

practice and it is this new design which makes the ultra high speed possible, at the same time assuring great reliability if operated in the usual speed ranges.

In the illustration a cut through section shows the glass envelope which surrounds all the moving parts and protects them from moisture, dust or corrosive fumes.

With this new type of construction, sensitivities down to ½ milliwatt are possible. Ratings up to 5 amperes can be obtained. Closing time can be less than one millisecond.

The outside dimensions of the 115 volt a-c 1 ampere rating are three inches high and one and one-half inch base diameter.

For further data, write the Stevens-Arnold Co., Inc., 22 Elkins St., So. Boston, Mass.

SOLDERING IRON

The Kwikheat Thermostatic Soldering Iron has a thermostat self-contained — maintaining constant heat at all times and preventing overheating.

The Kwikheat Iron has an unusually long life expectancy because it eliminates the excessively high temperature acquired by the conventional electric soldering iron when in "idle" condition . . . the major contributing factor in soldering iron deterioration. Tips, too, last longer because they are never overheated and consequently need less retinning in this modern tool.

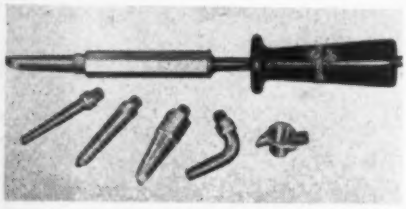

This unusual soldering iron is called "Kwikheat" because it heats up, ready-to-use only 90 seconds after plugging in. This is made possible by a special powerful 225 watt quick-heating element—held in check by the thermostat.

Although the Kwikheat Thermostatic Soldering Iron has been proved in use for several years by large industrial users it is now available generally for the first time on a nationwide basis through supply houses. It is manufactured by Sound Equipment Corporation of California, 3901 San Fernando Road, Glendale 4, California.

SCREW TYPE IRON CORES

Screw type molded iron cores now being made generally available for the first time by the Stackpole Carbon Company, St. Marys, Penna., offer many engineering and constructional advantages by virtue of the fact that the cores themselves are threaded. Thus, no brass core screw is necessary for their adjustment. There is no metal in the field of the coil and the cores

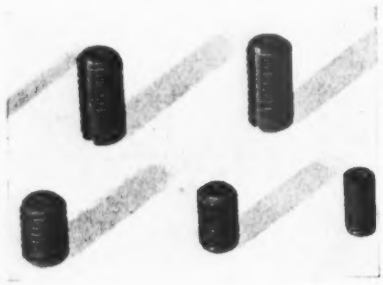

themselves are not grounded. Considerably higher Q is the result.

Smaller assemblies are readily possible because the overall length of a coil and screw type core is less than that of the conventional core, machine screw and bushing. Smaller cans can be used. Threaded coil forms are unnecessary in many cases. Instead, "C" clips extending through slots in the coil forms can be used to contact the core threads.

The design of i-f and dual i-f transformers for AM and FM, is greatly facilitated due to the fact that screw cores may be tuned from one end of the transformer simply by placing the coils side by side. Antenna, r-f and oscillator coils for each band of multi-band sets become small and compact by use of screw cores and may be mounted in groups for each band.

Complete details will gladly be sent upon request to the manufacturer.

LOUDSPEAKER FEATURE

An entirely new and patented feature, called the "Adjust-A-Cone", will now be included in the entire line of postwar loudspeakers being marketed by Quam-Nichols Company, 33rd Place & Cottage Grove Avenue, Chicago, Ill., it was announced by J. P. Quam, president of the firm.

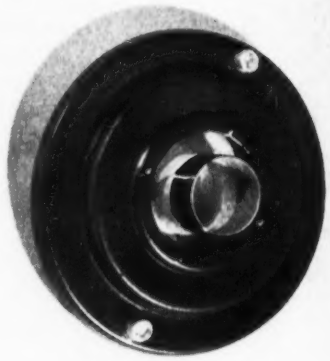

In this new unit, the spider of the loudspeaker, instead of being permanently glued or fastened to the basket or pot, is kept in position with a pressure or clamping ring, which is in turn held down by two machine screws. By loosening the screws holding the pressure ring, a small lateral movement of the spider is permitted by which the voice coil can be re-centered concentrically around the pole-piece and within the gap.

This new feature will be of great advantage to the serviceman, as the screws holding the clamping ring in this unit are so positioned that it is often unnecessary to remove the loudspeaker from the chassis to re-center the voice coil. Neither need a rubbing voice-coil assembly be replaced as heretofore.

HUMIDITY CHAMBER

A new insulated variable temperature and humidity chamber for the simulation

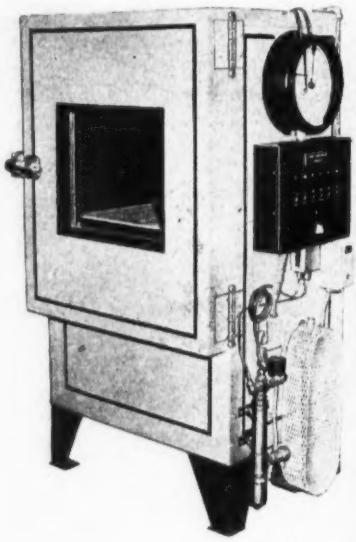

SYLVANIA NEWS

ELECTRONIC EQUIPMENT EDITION

NOV. *Published by* SYLVANIA ELECTRIC PRODUCTS INC., Emporium, Pa. 1945

RADIO AND ELECTRONIC EQUIPMENT MAKERS GETTING SET FOR FULL-SCALE PRODUCTION

Will Receive Highest Quality Tubes From Sylvania Electric To Meet Pent-Up Demand

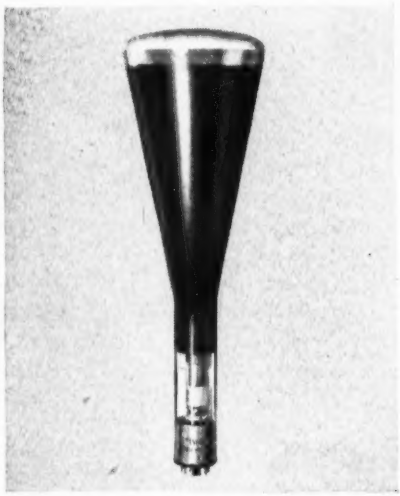

CATHODE RAY TUBES

With the period of reconversion taking active form and spreading over the nation, the radio industry is looking forward to what promises to be one of the most expansive developments in its history. Millions wait for radio sets of improved design and, consequently, of more complex construction. Industries will turn to greater use of electronic equipment.

Manufacturers are rapidly getting set for full-scale production to meet this pent-up demand. Of course, in radio there's the problem of obtaining an adequate supply of component parts.

However, as far as dependable, pre-

LOCK-IN RADIO TUBES

cision-built radio tubes are concerned, set makers are assured of receiving the benefits of Sylvania's more than 40 years' research experience and wide-scale production facilities. Note this list:

Television—experience in design and the production of untold thousands of Sylvania Cathode Ray Tubes for war requirements has contributed greatly to peace-time applications.

High frequency sets (FM, Television)—the Sylvania Lock-In Tube is so electrically and mechanically perfect in construction that it can handle

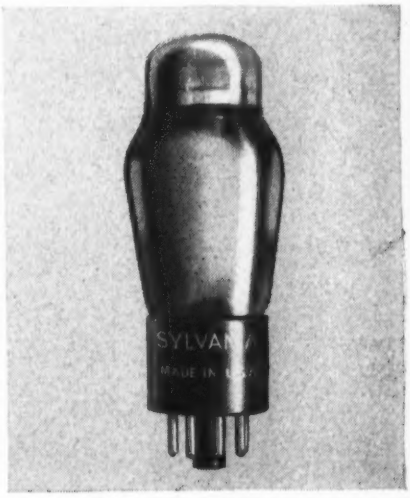

"GLASS" RADIO TUBES

ultra-high frequencies with ease. Besides, it is more than perfectly suitable for *all* types of radio sets.

Radio—manufacture and distribution of the famous high quality Sylvania lock-in "Glass" and miniature tubes will continue to satisfy the exacting circuit requirements of modern radio receivers.

Electronic devices—the same laboratory and manufacturing resources that served our government so well, are now available to the manufacturer of electronic devices of every description.

SYLVANIA ELECTRIC

Emporium, Pa.

MAKERS OF RADIO TUBES; CATHODE RAY TUBES; ELECTRONIC DEVICES; FLUORESCENT LAMPS, FIXTURES, WIRING DEVICES; ELECTRIC LIGHT BULBS

and control of atmospheric conditions has been announced by Tenney Engineering, Inc., 26 Avenue B, Newark 5, N. J., makers of automatic temperature, humidity and pressure control equipment.

Cabinets are designed to provide accurate simulation and control of any desired temperature, humidity and air circulation condition in laboratory or production testing operations. Batches or parts can be tested under standard or variable conditions. Temperature, humidity and air circulation can be controlled to close preselected limits.

Conditioned air is kept in continuous forced circulation without undesirable draft. Uniform wet and dry bulb temperatures throughout the cabinet are thus provided.

Dry bulb temperature of the air can be set from room temperature to any desired point. When unit is operating, this temperature does not vary in any part of cabinet by over 1°C. plus or minus.

Relative humidity can be controlled up to 90% and atmosphere will not vary over plus or minus ½°C. from the wet bulb of the humdity required.

Under any set conditions, temperature and humidity will remain constant during operation. A simple resetting of controls brings cabinet to a new equilibrium within ten to fifteen minutes.

WIRE RECORDER

The "Magicwire", as manufactured by Utah Radio Products Company, Chicago, is a portable recording reproducing device

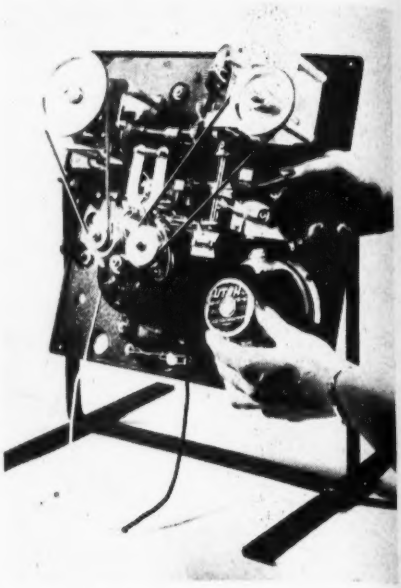

capable of making recordings on a moving steel wire and reproducing them immediately. It accomplishes this by producing small magnets along the moving wire according to the frequency and intensity of the audio signal, and converting the "peaks" and "valleys" of the moving magnetic field thus produced into sound by suitable electrical and mechanical means.

The complete unit is contained in a small carrying case and is always ready for instantaneous use. It is designed to operate on 115-volt, 60-cycle alternating current. Provision is made at the rear of the unit for connection to a source of power.

A full-wave rectifier tube (5W4), a three-stage audio amplifier, a 30-kilocycle oscillator tube (6V6), a record-listening mechanism, a drive motor and associated mechanism, and necessary accessories comprise the recorder and reproducer. The rectifier tube supplies plate voltage for the audio amplifier and oscillator. During a recording period the output of the audio amplifier is connected in series with the oscillator-transformer and to the coil in a unit on the front of the machine called the record-listen head. This device produces the small magnets along the moving wire during recording operations, and picks up these same magnetic impulses for conversion into sound during listen periods. During a play back period, the audio output of the third stage is connected to the coil in the loudspeaker. Earphones may be connected, if desired, to an audio output jack located at the control panel. This earphone connection may be used also to listen in on programs when the machine is recording directly from a radio. The wire used on the machine is only .004 of an inch in diameter, and each spool, which is about 3" in diameter, will take 66 minutes of recording.

C-D COLOR CODE CARDS

Since the capacitor industry has adopted the practice of marking mica capacitors by a color code, a chart giving the RMA standards for the Six Dot Color Code and the Three Dot Color Code as well as the Army and Navy Standards has been a necessity to users of mica capacitor types. Cornell-Dubilier Electric Corporation has

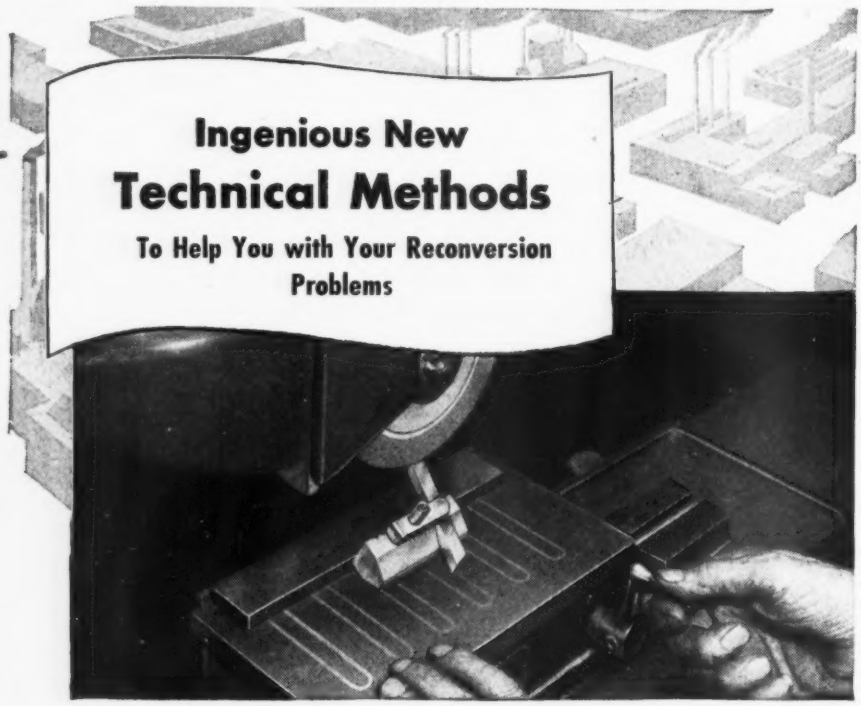

NOW *ANYONE* CAN GRIND THREADING TOOLS! —WITH MASTER GRINDING GAUGE!

Until the advent of the Acro Master Grinding Gauge, only a skilled mechanic could grind thread-cutting tools to the required degree of accuracy. Now anyone can do it—in less time, with less waste, with even greater precision!

The cutting tool is simply placed in slot of the Master Grinding Gauge, and thumb screws hold it tightly in place, at the proper angle, while being ground on any type of surface grinder! The Gauge is made of hardened tool steel. There are no delicate or moving parts to get out of order. Milled slots at top and bottom provide correct grinding angles. A small set screw at end, eliminates any lateral motion. There is nothing special to learn —anyone can use it!

Anyone can be "helped on the job" by Wrigley's Spearmint Gum, too, once this quality product again becomes available. Just now, no Wrigley's Spearmint Gum is being made, and until conditions permit its manufacture in quality and quantity for everyone, we again urge you, please, to "Remember the Wrigley's Spearmint wrapper." It is our pledge to you, of the finest quality and flavor in chewing gum—that *will* be back!

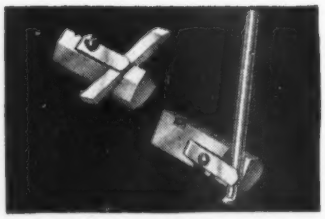

Acro Master Grinding Gauge

Remember this wrapper

You can get complete information from:
Acro Tool and Die Works, 4554 Broadway, Chicago 40, Ill.

Z-90

RADIO INTERFERENCE ?

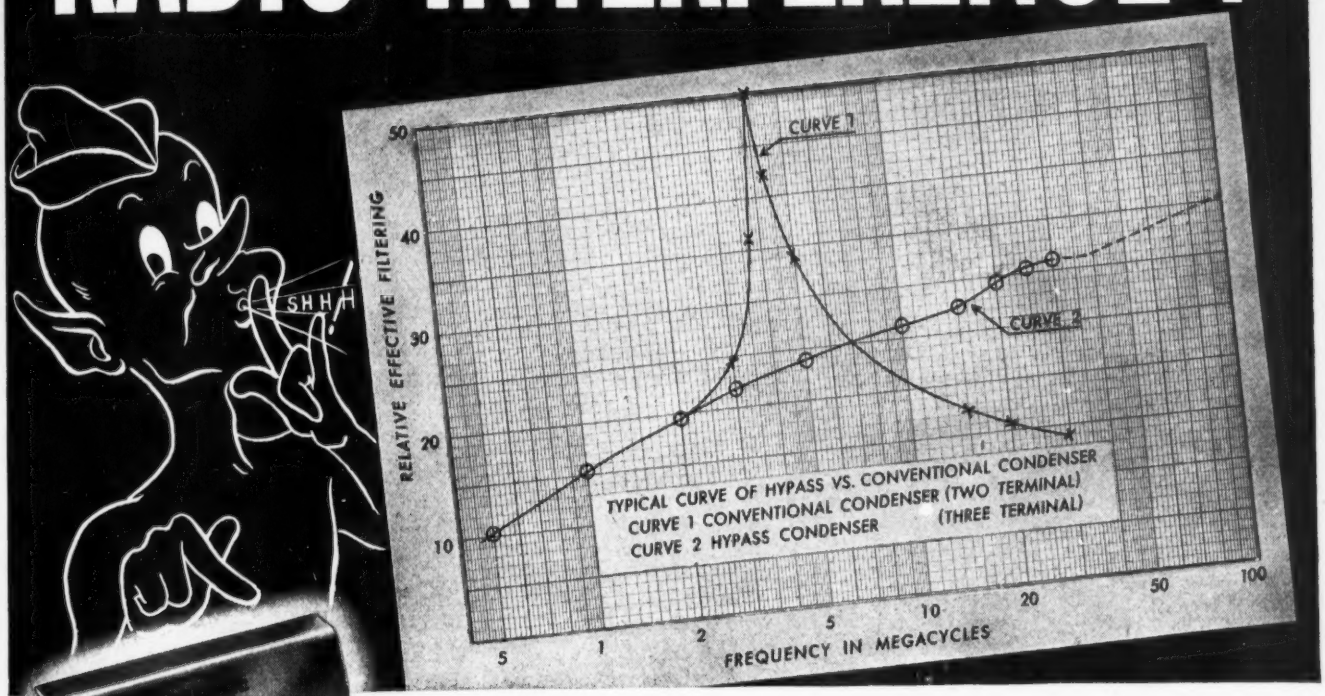

SPRAGUE HAS *the Answers!*

From inexpensive noise suppression capacitors for automotive use, to heavy-duty designs for service on power equipment, and for current ratings from 5 to 200 amperes capacity, Sprague produces modern filter units for practically any need. An unsurpassed background of engineering experience in dealing with all types of radio noise interference problems, is here at your disposal. Write for Sprague Capacitor Catalog 20.

ANTI-RESONANT FREQUENCY PROBLEMS SOLVED

Have you a vibrator "hash" problem that a conventional by-pass capacitor shunted by a mica capacitor only partially solves?

Write for details on Sprague* HYPASS Capacitors, the 3-terminal networks that do the job at 100 megacycles or more!

SPRAGUE ELECTRIC COMPANY

North Adams, Mass.

*Trademark Reg. U. S. Pat. Off.

SPRAGUE

ARMY E NAVY

5-Times Cited for Distinguished Wartime Service

PIONEERS OF ELECTRIC-ELECTRONIC PROGRESS

prepared a small card to fit into the pocket which incorporates all three of these standard color codes as well as a larger wall chart. The basis of the code is the use of a distinct color for every number from zero to nine inclusive.

Copies of these Color Code Cards may be obtained free by writing to Cornell-Dubilier Electric Corporation, New Bedford, Mass.

HIGH-SPEED COUNTER

An improved two-decade Electronic High-Speed Counter, designed to fill the need in fields unable to employ conventional mechanical counters, has been announced by Potter Instrument Company of 136-56 Roosevelt Avenue, Flushing, N. Y.

This counter unit is particularly applicable for counts exceeding 10 cycles per second, a rate which is too fast for conventional counters, and in installations where mechanical counters would wear out prematurely because of the high-speed continuous operation.

Used alone as a two-decade instrument, the maximum count capacity of the electronic counter is 100. A tube-operated relay is provided for cases where the quantity to be counted exceeds 100. The relay has a single-pole, double-throw contact which is brought out to terminals on the front panel of the unit, and operates once for each 100 counts.

An electro-mechanical counter may be connected in series with these terminals and an appropriate external power source, such as the a-c line. Each 100 counts of the electronic counter will then cause one operation of the electro-mechanical counter.

When operation of the relay and an external mechanical counter are not involved in the application of the two-decade electronic counter, it may be used alone, at counting rates up to 20,000 per second.

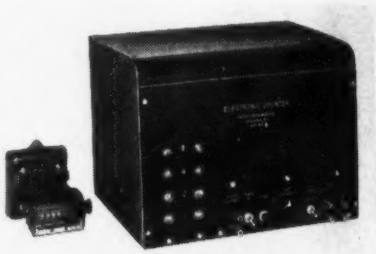

The two-decade electronic counter is complete with power supply, and is ready for operation from a nominal 115 volts, 60 cycle a-c power line. No special types nor special selection of vacuum tubes are required for the counter's 12-tube complement.

For complete information on the counter, write the manufacturer for their bulletin. For individual application problems, the company's staff of field engineers is available for consultation.

U-H-F AMPLIFIERS

Compact, rugged, high-frequency amplifiers for center frequencies between 30 and 70 mc, with any bandwidth from 2 to 10 mc are announced by Sylvania Electric Products, Inc., Industiral Electronics Division, Boston, Mass. These sets are designed particularly for use as i-f amplifiers in u-h-f and s-h-f receiver applications.

A typical amplifier has an overall gain of 100 db with a center frequency of 60 mc

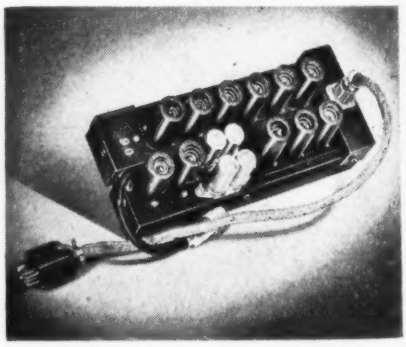

and a half-power bandwidth of 9.0 mc. An external gain control is easily provided. Unless otherwise specified, a standard 500 ohm input impedance is supplied. The output stages are cathode followers designed to operate into impedances of 75 to 100 ohms with voltages ranging from 0.5 to 2.0 volts, negative or positive.

The video detector may take one of several forms according to the special application of the amplifier. In broad-band circuits the frequency characteristics of the rectified video components will be such that the output at 8 mc will be reduced not more than 3 db from the output at 1 mc. These amplifiers will thus pass a square top

OUT IN DECEMBER

Not just another book on the vacuum tube, this typical Rider Book offers a new approach and technique that makes its message easy to understand. Here is a solid, elementary concept of the theory and operation of the basic types of vacuum tubes.

After explaining the electron theory, the text presents a discussion on electrostatic fields. The reader's understanding of the distribution and behavior of the fields within a tube gives him a better picture of why amplification is accomplished within a tube.

Many diagrams and graphs are repeated to minimize the turning of pages in reading text and drawings. Anaglyphs give "three-dimensional" pictures of phenomena heretofore seen only in two dimensions; an aid in rapid understanding of the text.

Although an elementary book on a fundamental subject, therefore a goldmine for the student; developments in radio and the new fields of television and microwaves make it a must for the libraries of servicemen, amateurs and engineers.

Place your order today.

OTHER RIDER BOOKS

RIDER MANUALS (14 VOLUMES)

Volumes XIV to VII	$12.50 each volume
Volumes VI to III	9.50 each volume
Abridged Manuals I to V (1 Vol.)	$15.00
Record Changers and Recorders	7.50
The Cathode Ray Tube at Work	4.00
Frequency Modulation	2.00
Servicing by Signal Tracing	4.00
The Meter at Work	2.00
The Oscillator at Work	$2.50
Vacuum Tube Voltmeters	2.50
Automatic Frequency Control Systems	1.75
A-C Calculation Charts	7.50
Hour-A-Day-with-Rider Series—	
On "Alternating Currents in Radio Receivers"	
On "Resonance & Alignment"	
On "Automatic Volume Control"	
On "D-C Voltage Distribution"	1.25 each

JOHN F. RIDER PUBLISHER, INC. 404 Fourth Avenue, New York 16, N. Y.

Export Division: Rocke-International Electric Corp. 13 E. 40th Street New York City Cable: ARLAB

RIDER MANUALS *are complete* IN 14 VOLUMES

Here's the easiest way to get 10 WATTS OUTPUT at 156 Mc!

Build your Xmtr around HK-24G *Gammatrons*

JAN 3C24

Designing transmitters for the 152 to 162 megacycle region can be greatly simplified through the use of HK-24Gs. In the circuit below one of these tubes produces 10 watts at 156 Mc; more than ample to excite a pair of HK-257Bs in a 400 watt final.

These efficient Gammatrons, with low inter-electrode capacities and short plate and grid leads, are the answer for those who are engineering 1.9-meter equipment for railroads, police point-to-point, fire, press or broadcast relays, maritime, geophysical, urban telephone, and experimental use. They are also ideally suited for amateur transmitters on the 144-148 megacycle band, authorized as of November 15.

Not only will HK-24Gs do the job, but they will do it at low cost. Made with tantalum elements, without internal insulators, they can withstand heavy overloads and have a long operating life. And they are offered at a new low price made possible by improved production methods.

HK-24Gs are available now in quantity . . . and are one of Heintz and Kaufman's *standardized* types. Maximum plate dissipation 25 watts. Write today for data.

HEINTZ AND KAUFMAN LTD.
SOUTH SAN FRANCISCO · CALIFORNIA

EXPORT AGENTS: M. SIMON & SON CO., INC., 25 WARREN STREET, NEW YORK CITY, N. Y.

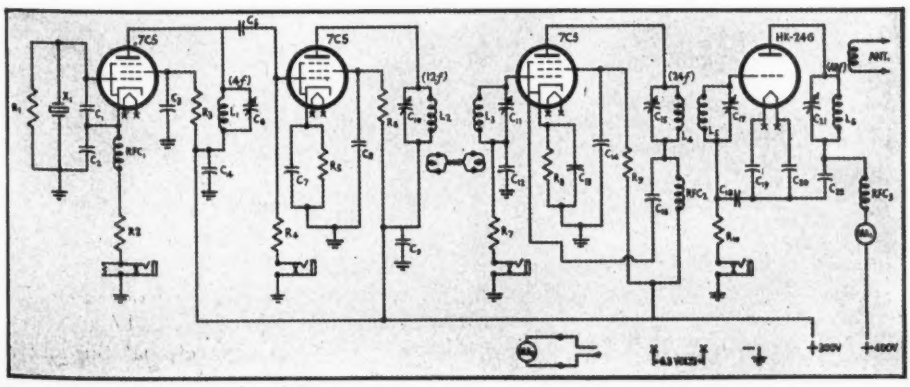

COMPONENT PARTS FOR WIRING DIAGRAM

C_1—35 mmfd.
C_2—250 mmfd.
C_3, C_4, C_7, C_8, C_9, C_{12}, C_{13}, C_{14}—.002 mfd.
C_5—50 mmfd.
C_6—APC 100
C_{10}, C_{11}, C_{15}, C_{17}—APC 25 mmfd.
C_{16}, C_{18}, C_{22}—100 mmfd.
C_{19}, C_{20}—250 mmfd.
C_{21}—15 mmfd.
R_1—100,000 ohms, ½ watt
R_2—200 ohms, 1 watt
R_3—10,000 ohms, 1 watt
R_4—250,000 ohms, ½ watt
R_5, R_8—500 ohms, 1 watt
R_6, R_9—20,000 ohms, 1 watt
R_7—100,000 ohms, ½ watt
R_{10}—15,000 ohms, 2 watts
RFC_1—2.5 mh.
RFC_2,
RFC_3—Hf choke, approx. 50 turns No. 32 on ¼" form.
MA_1—0-100 ma.
MA_2—0-25 ma.
X_1—3.5 Mc. crystal
L_1—19 turns No. 22 DCC ⅝" form
L_2—7 turns No. 14 enamel, 3/16" dia. Length ¾" air, link
L_3 coupled to L_2 with one turn.
L_4—6 turns No. 14 enamel, dia. ⅜", length 7/16" air, induc-
L_5 tively coupled on same axis.
L_6—4 turns No. 12 copper, dia. ⅜", length ⅜"

Note: Grid and plate by-passes on driver and doubler final should be returned directly to tube cathode. All jacks are closed circuit jacks.

pulse having a duration of 0.15 microsecond or greater without appreciable frequency or phase distortion, making them particularly suited to television receiver applications.

Either single ended or balanced input circuits are supplied. The balanced input circuits are designed for use with dual input systems and will distinguish between in-phase and out-of-phase signals from two channels. In one such unit this discrimination is 33 db.

Power supply for a typical amplifier inclues + 105 volts d.c. at 90 ma, + 300 volts d.c. at 20 ma, and 6.3 volts a. c. or d.c. at 1.7 amperes. External gain control requires 0 to − 12.5 volts d.c. at 1.5 ma.

CONNECTOR BULLETIN

A new revised edition of the Cannon Electric Type "K" Bulletin on electric connectors is now ready for distribution. This new and revised edition contains 64 pages of valuable information on "K" and "RK" plugs, receptacles, dust caps, junction shells, stowage receptacles for aircraft, instruments, radio, motors, geophysical equipment, and general electrical applications.

The bulletin contains many photographs, exploded views, production illustrations, orthographic dimensional sketches, and application pictures, in addition to the data on the various styles of "K" connectors.

The bulletin will be sent free upon request from Cannon Electric Development Company, Catalog Dept., 3209 Humboldt St., Los Angeles 31, California.

FINE WIRE BOOKLET

A new 8-page booklet titled "Fine Wire of Special Materials," has been announced by North American Philips Company, Inc., 100 East 42nd Street, New York.

The text material was written by Robert L. Zahour, Technical-Commercial Manager of the company's Wire Division, and brings the reader up to date on manufacturing methods and problems connected with wires 0.002" to 0.0007" diameters and smaller.

Among the subjects treated are:

1. Important steps in producing a good diamond die
2. Drawing the wire
3. Methods for checking diameter, elongation, tensile strength and ohmic resistance
4. X-ray diffraction examination of atomic structure.

The booklet contains ten photos which make the text easy to understand.

MIDGET JACKS

Completely reconverted to peacetime production, within eight days after V-J Day, the Insuline Corporation of America has recently released a post-war series of midget-sized jacks, designed to function wherever space is at a premium.

Three different models make up the line: single closed-circuit, single open-circuit, and a three-way microphone type. Excepting the molded bakelite separators, all materials are non-ferrous. The tooled-brass body and the phosphor-bronze spring members are nickel-plated.

Various new engineering features are incorporated into the design. Arched spring members minimize tension fatigue. Construction holds creepage and dust accumulation to a minimum; and interlocked component parts prevent turning and shorts. Easier wiring, provided for by hook-type soldering lugs, offers another important advantage.

COPPER-OXIDE RECTIFIER

A new full wave, copper-oxide rectifier, rated at either 12 volts a.c. and 50 milliamperes d.c., or 6 volts a.c. and 100 milliamperes d.c. has been added to its line of "Coprox" rectifiers by Bradley Laboratories, Inc., 82 Meadow Street, New Haven 10, Conn.

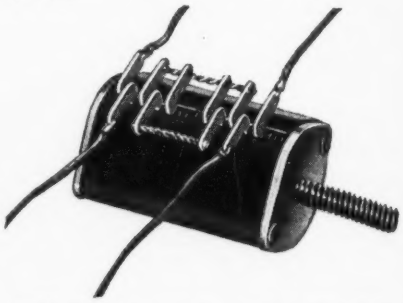

This new item is actually a double unit of Bradley's Model CX-4D4-F23, recently redesigned to handle much greater capacity than the original version. The single unit is now rated at 6 volts a.c. and 50 milliamperes d.c. continuous. It mounts on a single screw, is fully enclosed and completely sealed with a special plastic compound. Pre-soldered lead wires prevent overheating during assembly.

NOVEL FASTENER

The Rivnut, a one-piece internally threaded and counterbored tubular rivet which can be upset or headed from one side with a simple tool and used as a blind rivet, nut plate for attachment, or both, is now being made in steel, it is announced by The B. F. Goodrich Company, developers of the fastener.

Originally made only in aluminum and then also in a brass alloy, extension to steel will allow much greater utilization of the product, the company believes. The aluminum Rivnut was initially used for airplane industry applications, but the field has been broadened to include many other services.

The new standard steel Rivnuts are made in 6-32 thread, 8-32 thread, 10-32 thread, 12-24 thread, ¼"-20 thread and 5/16"-18 thread. They can be made in special sizes on order.

An additional head style, the brazier head, is introduced; the trailer and bus industry using this because of the ease of cleaning, there being no sharp edges around the head.

CORRECTION

In the vector diagram shown on page 44, third column, of our October, 1945 issue, the designation of one leg of the triangle should have read, $1/\omega C$, instead of $1/\omega^2 C^2$. We regret that this draftsman's error slipped by us.

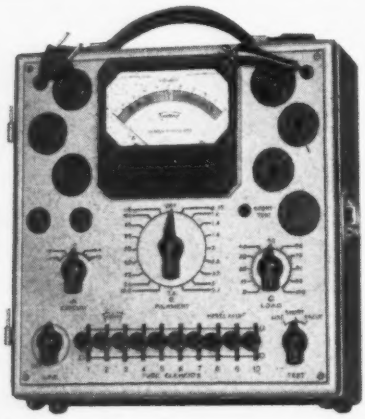

The New **Speed-Chek Tube Tester**

MORE FLEXIBLE • FAR FASTER MORE ACCURATE

Three-position lever switching makes this sensational new model one of the most flexible and speediest of all tube testers. Its multi-purpose test circuit provides for standardized VALUE test; SHORT AND OPEN element test and TRANSCONDUCTANCE comparison test. Large 4" square RED•DOT lifetime guaranteed meter.

Fast simple operation gives control of each tube element.

New SQUARE LINE series metal case 10" x 10" x 5½", striking two-tone hammered baked-on enamel finish. Detachable cover. Tube chart 8" x 9". Simple settings marked in large type.

Model 2413

is another member of the NEW TRIPLETT Square Line

Additional Features

- **Authoritative tests for tube value; shorts, open elements, and transconductance (mutual conductance) comparison for matching tubes.**
- **Flexible lever-switching gives individual control for each tube element; provides for roaming elements, dual cathode structures, multi-purpose tubes, etc.**
- **Line voltage adjustment control.**
- **Filament Voltages, 0.75 to 110 volts, through 19 steps.**
- **Sockets: One only each kind required socket plus one spare.**
- **Distinctive appearance makes impressive counter tester.**

Triplett

ELECTRICAL INSTRUMENT CO. BLUFFTON, OHIO

The RACON Marine Horn Speaker is used both as a loudspeaker and as a microphone. Approved by the U. S. Coast Guard for all emergency loudspeaker systems on ships. A double re-entrant type speaker, completely waterproofed and weatherproof. Ideal for general P.A. and Marine use. Several sizes available. RACON Permanent Magnet Horn Units are available in operating capacities of from 10 to 50 watts.

In judging the value of sound reproduction equipment, the month-after-month, year-after-year dependability and efficiency of loudspeakers are prime considerations along with fidelity, output and initial cost.

RACON has never compromised with quality. **RACON Speakers and Driving Units are recognized as the standards by which other loudspeakers are judged. RACONS are used on U. S. Army Transport and Navy vessels — by other branches of the Military — in factories, schools, auditoria, shipyards, etc. RACONS are available for every conceivable application. Specify RACON when planning your next sound or public address installation**

RACON ELECTRIC CO., 52 East 19th St., New York, N. Y.

RACON

FREE!

The famous 64-page, fact-packed book that has stimulated thousands of men!

"Forging Ahead in Business" is a practical, thoughtfully-written book with "punch" and common sense on every page. It carries a message of vital importance to every man who wants to make more money, get a better job and improve his station in life.

Partial Contents:

- Law of Success
- Forging a Career
- Organized Knowledge
- Highway of Achievement
- Making Decisions
- Failure and Success

Noted Contributors

Among the prominent men who have contributed to the Institute's training plan, which is described in "Forging Ahead in Business," are: Thomas J. Watson, President, International Business Machines Corp.; Clifton Slusser, Vice President, Goodyear Tire & Rubber Co.; Frederick W. Pickard, Vice President and Director, E. I. du Pont de Nemours & Co.

Simply return the coupon below, and your FREE copy of "Forging Ahead in Business" will be *mailed* to you.

MAIL COUPON TODAY

ALEXANDER HAMILTON INSTITUTE
Dept. 345, 71 W. 23rd St., New York 10, N. Y.
In Canada:
54 Wellington Street, West, Toronto 1, Ont.

Please mail me, without cost, a copy of the 64-page book—"FORGING AHEAD IN BUSINESS."

Name.....

Firm Name.....

Business Address.....

Position.....

Home Address.....

INVENTIONS

[*from page* 50]

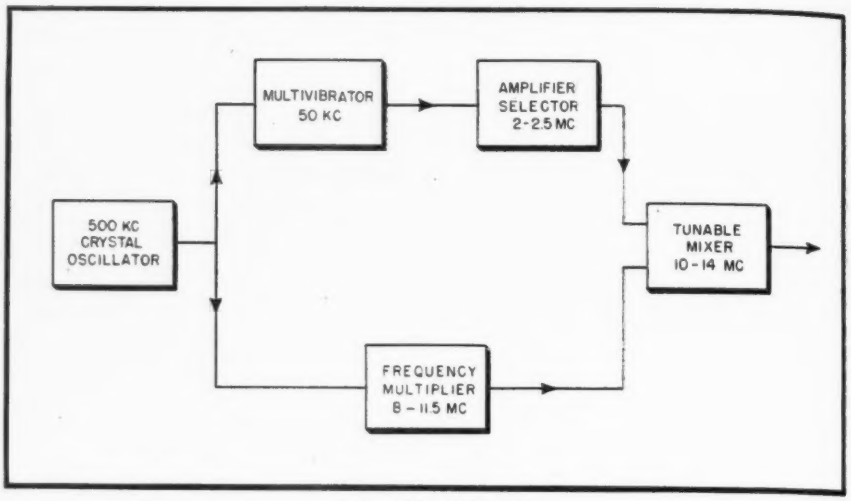

Patent No. 2,383,005

Frequency Control System

★ In a patent issued to William S. Marks on August 21, 1945, a method is shown whereby a single quartz crystal may be used to establish frequencies for several adjacent channels at frequencies higher than that conveniently reached by the crystal itself. The system is designed to avoid the use of multiple crystals in either the control of a multiple channel transmitter or in a heterodyne receiver which obtains push-button tuning by virtue of switching the frequency of a crystal-controlled local oscillator. A feature of the system is the avoidance of using high multiples or submultiples of the crystal frequency.

The figure shows a block diagram of the system as it is arranged to provide channels of 50 kc spacing between 10 and 14 megacycles. The 500 kc crystal frequency is multiplied to obtain any desired multiple between 8 and 11.5 mc. To the one selected is added a frequency which is a chosen multiple of 50 kc that lies between 2 and 2.5 mc. The addition is performed in a tunable mixer of the usual heterodyne type which is capable of helping to choose the 50 kc multiple desired. The 50 kc multiple in the 2 to 2.5 mc range is obtained by choosing a harmonic of a 50 kc multivibrator which runs with its frequency locked in with the 500 kc crystal oscillator.

The patent, which is unassigned, is number 2,383,005.

Reactance Tube Circuit

★ A method of using a reactance tube to produce a variation of frequency which is linear with control voltage over a greater range is claimed by Frank G.

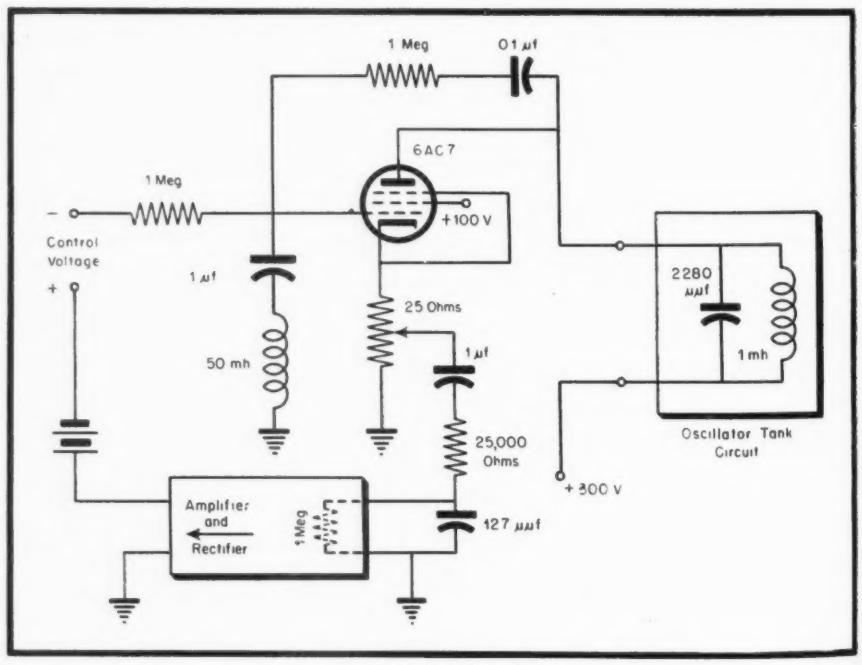

Patent No. 2,383,436

Marble in a patent granted August 14, 1945. A well-known reactance tube arrangement is used except that, instead of directly grounding the cathode as is usually done, a small resistor is inserted and the voltage across a part or all of that resistor is amplified and rectified in a new circuit. The resulting d-c voltage is used to correct the controlling voltage so as to aid linearity.

The circuit is shown in the accompanying figure. Numerical values of the components given illustrate the circuit for use when frequency control in the neighborhood of 100 kc is desired. The L and C values chosen for the tank circuit are such that more capacity is needed to tune to 100 kc. The reactance tube and its accompanying circuits, therefore, are required to act like a condenser in parallel with the one shown in the tank circuit. This means that the tube must draw a plate current which leads the a-c plate voltage supplied by the r-f oscillation and do this in a variable amount. This is what a variable condenser does, and if the reactance tube can introduce a variable component of current in such phase relation with voltage and if the strength of that component can be controlled by a d-c grid voltage, then the task of the reactance tube is accomplished. A feedback link between the plate and grid is connected so that the grid voltage follows the plate although with a 90° phase shift. Added this this is the usual 180° phase shift between grid voltage and plate current. These together produce the desired 90° phase advance of plate current over plate voltage, and the d-c level of the grid controls the magnitude of the plate current and, hence, the magnitude of the resulting capacitive effect.

All this has long been well known. The present invention recognizes that in such a device the grid control voltage is not linear with frequency but, instead, follows an S-shaped curve. Furthermore, it recognizes that the cathode current of the tube can be used to correct the grid voltage so that linearity is obtained for a reasonably large frequency range. The method of making the correction is shown in the drawing.

The patent, numbered 2,382,436, is assigned to the Bell Telephone Laboratories.

Reactance Control Circuit

★ An improved method of frequency control obtained by effectively varying the magnitude of a resistance placed in series with a reactance, is claimed in a patent issued to Murray G. Crosby on August 28, 1945. It has long been well known that if a condenser (or inductance) is connected in series with a resistance and then the pair connected

TELEVISION
MIRRORS
and REFLECTORS
FOR TELEVISION, ELECTRONIC AND SCIENTIFIC APPARATUS

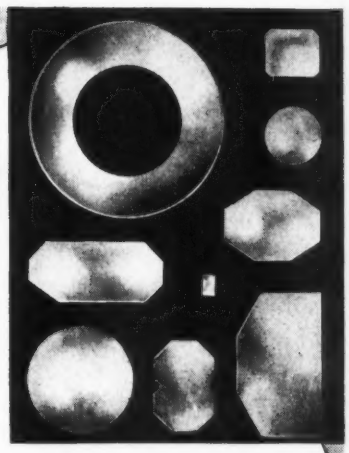

WE specialize in the production of front or rear surface mirrors, made to your specifications. Closest optical and dimensional tolerances observed.

Because of their proven superiority, ZENITH mirrors are preferred by many leading manufacturers of precision equipment.

- EXCEPTIONAL REFLECTIVITY
- ALUMINUM, SILVER, GOLD, etc.
- OPAQUE OR SEMI-TRANSPARENT
- PERMANENT CHARACTERISTICS
- PROMPT SERVICE

We invite your inquiry. Samples and quotations will be submitted promptly.

ZENITH OPTICAL LABORATORY
SPECIALISTS IN VACUUM DEPOSITION
Z OPTICAL LAB
123 WEST 64th STREET
NEW YORK 23, N. Y.

ANOTHER PUBLICATION BY THE EDITORS OF RADIO

CQ
The Radio Amateurs' Journal

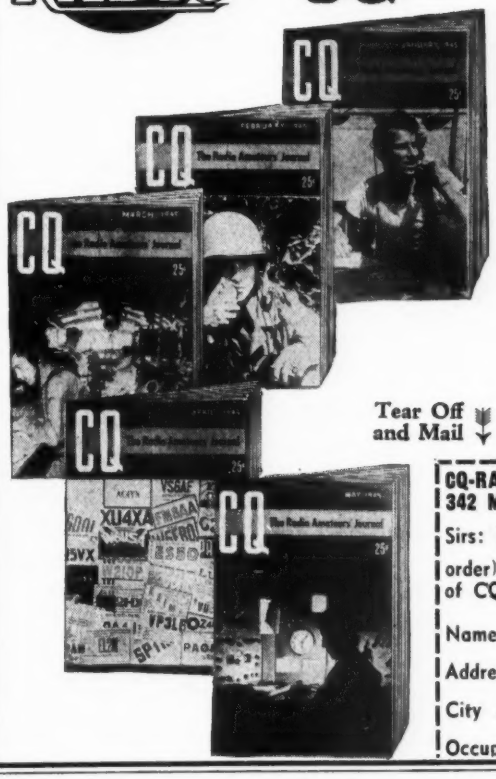

If you are or intend to be a "ham" — or if your work entails radio communications —you'll like CQ. Subscribe now!

12 issues $2.50
24 issues 4.00
36 issues 5.00

In U.S.A. & Possessions
Elsewhere $3.50 per year

Tear Off and Mail

"CQ" is sold on newsstands

CQ-RADIO MAGAZINES, INC.
342 MADISON AVE., NEW YORK 17, N. Y.
Sirs: Here is my ☐ check (or ☐ money order) for $..... Send me ..... issues of CQ.
Name .....
Address .....
City ..... State .....
Occupation ..... Call Letters.....

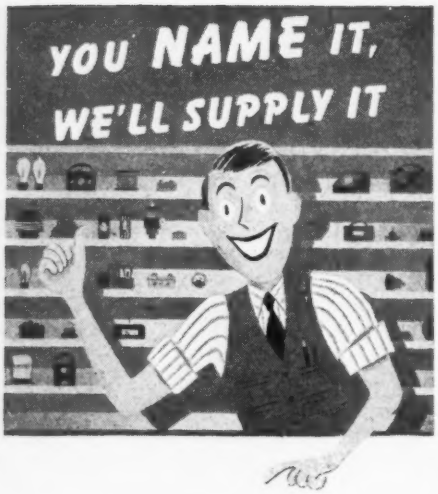

EVERYTHING IN RADIO AND ELECTRONICS

R. W. T., world's oldest and largest Radio Supply House is ready again with tremendous stocks of sets, parts and equipment. You can depend on our quarter-century reputation for quality, sound values and super-speed service. Orders shipped out same day received. All standard lines already here or on the way, including: National, Hammarlund, R. C. A., Hallicrafters, Bud, Cardwell, Bliley and all the others you know so well.

Originators and Marketers of the Famous Lafayette Radio

Radio Wire Television Inc.

100 Avenue of the Americas, New York 13
(Formerly Sixth Avenue)
Boston, Mass. • Newark, N. J.

"No supplier anywhere has a bigger stock of Radio and Electronic equipment, Test equipment, Public Address equipment, Communications equipment. If your engineering problem requires special equipment, we'll make it. Write today Dept. BK5."

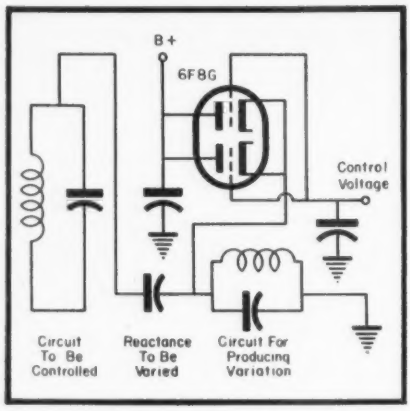

Patent No. 2,383,848

across a resonant circuit, the resonant frequency of the circuit can be varied by changing the value of the resistance. Methods have also been known which make use of a vacuum tube as the resistor, so that a d-c voltage can be made to change the resistance value and, hence, the resonant frequency. The present invention is considered to be an improvement on prior methods of using such a vacuum tube.

In the figure it may be seen that the resistance is really two resistances connected in parallel. These are together connected in series to a condenser so as to form the shunting network of the resonant circuit. One resistor is the impedance of the tuned circuit in the cathode connection to the tube and the other is the r-f impedance from cathode to plate and cathode to grid. The impedance of the tuned cathode circuit is actually very close to a resistance because, taking into account the cathode to ground impedance of the tube, the circuit is tuned to the mean resonant frequency of the resonant circuit to be controlled. The internal resistance between cathode and plate or cathode and grid is only the effective resistance presented by the beam characteristics of the tube because both plate and grid are held at r-f ground potential by large condensers. This resistance in the case shown has a minimum value of 300 ohms, and may be increased by using a control voltage to make the grids more negative than they are when the tube is passing the maximum for which it is rated.

The patent, number 2,383,848, is assigned to RCA.

FM Transceiver

★ On June 26, 1945, a compact and light-weight frequency modulation transceiver was patented jointly by Marc Ziegler, Juan F. Visscher, and Luis J. Cavallero, all of Buenos Aires, Argentina. The design, which is shown in one form in the accompanying block diagram, features crystal control of both the transmitting frequency and the receiver calibration. It obtains simplicity and compactness by using many of the components in both transmitting and receiving operations.

When the three ganged switches are in the position shown, a normal heterodyne receiver with a crystal-controlled local oscillator results. When the switches are changed to the other position, an FM transmitter which uses the main components of the receiver to stabilize the average transmission frequency is obtained. A small portion of the output from the power amplifier is carried back into the i-f strip. If the frequency of the variable frequency oscillator is correct, this feedback signal, after conversion by the crystal oscillator, will produce the correct intermediate frequency to create no discriminator voltage. On the other hand, if the variable frequency oscillator drifts to a new frequency, the i-f signal will change and cause the discriminator to generate a voltage which is applied to the reactance tube so as to correct the drift in frequency.

The patent, number 2,379,395, is assigned in trusteeship to the Hartford National Bank and Trust Company.

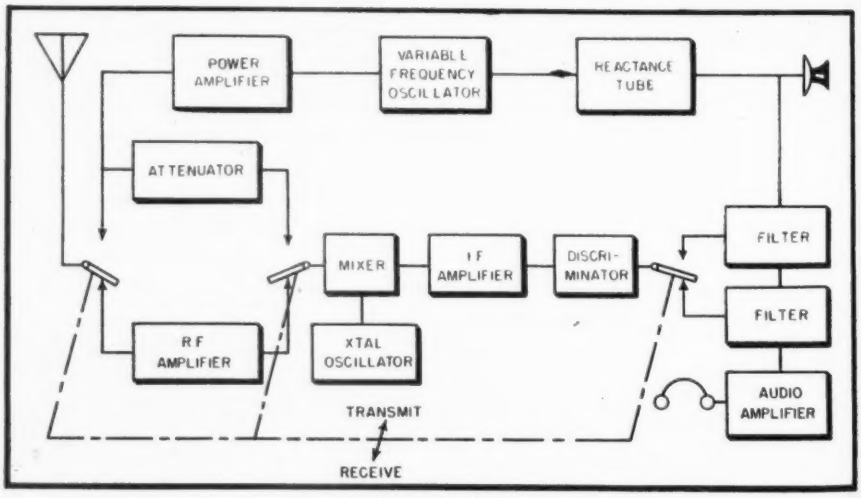

Patent No. 2,379,395

THIS MONTH

[*from page* 55]

mental radio relay systems between New York and Washington, New York and Pittsburgh and Washington and Pittsburgh, and a secondary system between New York and Philadelphia.

This first step, a part of Western Union's extensive postwar improvement program, is known as "The New York-Washington-Pittsburgh Triangle." Its establishment in time will permit the removal of approximately 2500 miles of pole lines, with some 54,000 miles of wires and 180 miles of aerial and underground cable.

The system planned for the "Triangle" would provide radio beams in each direction. Each beam could be equipped to provide 270 multiplex circuits, so that 1,080 operators could transmit telegrams simultaneously over a beam in one direction, but there is no present likelihood that traffic between any two cities would require such a large capacity. The radio relay facilities, however, may be used for various kinds of circuits, including multiplex, facsimile and teleprinter.

The FCC has been asked to permit the operation of the "Triangle" on some of the high frequency bands recently allocated for use by radio relay systems. Authority also has been requested to handle commercial telegraph traffic as part of the test program.

The new system is expected to improve the quality, dependability and speed of service provided to the public. It also will make possible substantial savings in the present costs of maintaining and replacing pole lines.

Establishment of the "Triangle" involves the installation of terminal equipment in the four cities and the construction of 21 intermediate relays in towers on mountains or hills ranging from 14 to 54 miles apart and having elevations up to 2900 feet. The towers will be from 60 to 120 feet in height. The sites for the relay stations have been acquired.

The 24-story Western Union Building at 60 Hudson Street will serve as the New York tower, with transmitting and receiving equipment on the roof. A 90-foot tower will be constructed on 41st Street near Wisconsin Avenue in Washington, D. C., and linked with the company's main operating room in that city. A tower will be erected on a bluff overlooking Pittsburgh from which radio circuits will be operated to equipment on the roof of the Chamber of Commerce Building which houses the main operating rooms there. In Philadelphia the roof of the Market Street National Bank Building will be used.

On top of the other radio relay towers, which will be square, will be cabins 12 by 12 feet in size in which reflectors will be mounted for the purpose of directing the radio beams. Most of the equipment, however, will be housed in a building at the base of the tower. Normally the relay towers will be unattended, and will be surrounded by high fences.

An experimental radio relay circuit was established between New York and Philadelphia last spring in cooperation with the

RADIO PRODUCTION and REPRODUCTION

will be better because of

MONARCH

MEASURING • TESTING • CALIBRATING

EQUIPMENT

MONARCH MFG. CO.

2014 N. MAJOR AVE. • CHICAGO 39, ILL.

ATTENUATORS by TECH LABS

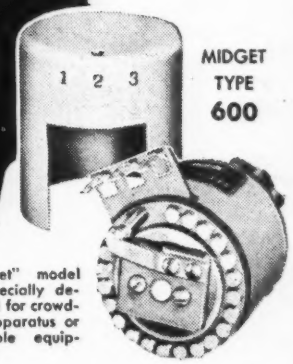

MIDGET TYPE 600

"Midget" model is especially designed for crowded apparatus or portable equipment.

STANDARD TYPE 700

- Solid silver contacts and stainless silver alloy wiper arms.
- Rotor hub pinned to shaft prevents unauthorized tampering and keeps wiper arms in perfect adjustment.
- Can be furnished in any practical impedance and db. loss per step upon request.
- TECH LABS can furnish a unit for every purpose.
- Write for bulletin No. 431.

TECH LABORATORIES

Manufacturers of Precision Electrical Resistance Instruments

337 CENTRAL AVE. • JERSEY CITY 7, N. J.

Attention!
RADIO STATION ENGINEERS!
HARVEY
can now make immediate delivery on
hallicrafters
Model S-36-A V.H.F.
RECEIVERS

FM-AM-CW 27.8 to 143 Mc.
Covers old and new FM Bands

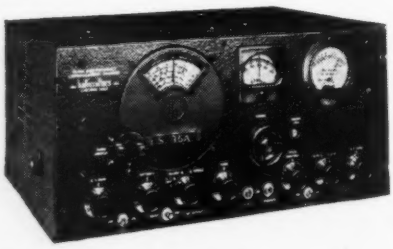

The Model S-36-A is probably the most versatile V.H.F. receiver ever designed. Covering a frequency range of 27.8 to 143 Mc., it performs equally well on AM, FM, or as a communications receiver for CW telegraphy. Equipment of this type was introduced by Hallicrafters more than five years ago and clearly anticipated the present trend toward improved service on the higher frequencies.

Fifteen tubes are employed in the S-36-A including voltage regulator and rectifier. The RF section uses three acorn tubes. The type 956 RF amplifier in conjunction with an intermediate frequency of 5.25 Mc. assures adequate image rejection over the entire range of the receiver. The average over-all sensitivity is better than 5 microvolts and the performance of the S-36-A on the very high frequencies is in every way comparable to that of the best communications receivers on the normal short wave and broadcast bands.

The audio response curve is essentially flat within wide limits and an output of over 3 watts with less than 5% distortion is available. Output terminals for 500 and 5000 ohms and for balanced 600 ohm line are provided.

NOTE: For those requiring higher frequency receivers, Harvey can now supply from stock the Hallicrafters Model S-37, with a frequency range of 130 Mc. to 210 Mc.

Telephone Orders to LO 3-1800

HARVEY RADIO COMPANY

103 WEST 43rd ST., NEW YORK 18, N. Y.

Radio Corporation of America and with the sanction of the FCC. It has been successful in meeting all of the tests imposed, it was stated, and provided the experience required as a foundation for the proposed nation-wide radio relay system. Under an agreement with R.C.A., the telegraph company has the right to use all inventions of R.C.A. and those under which R.C.A. has the right to grant licenses. The experimental circuit is in operation between the Western Union Buildings in New York and Philadelphia, with intermediate relay towers at New Brunswick and Bordentown, N. J.

HERMETIC SEALING

[*from page* 47]

The usual method of assembly is: (1) Solder glass-to-metal terminals to bottom cover and attach internal support brackets; (2) fasten core and coil to brackets and solder leads to terminals; (3) slip on case walls and solder to the bottom cover; (4) pour in potting compound, and solder on top cover; (5) finish with zinc chromate primer and a salt-water resistant lacquer.

Resistors

Wire-wound resistors have been constructed for many years by winding a cylindrical ceramic core with a helix of resistance wire of a nickel-chromium alloy. At full load rating, the maximum operating temperature is 275 degrees C. At this temperature, only inorganic coatings, such as vitreous enamel or a ceramic cement, could be used to protect the wire from corrosion. These coatings were not able to withstand the test thermal shocks without cracking; subsequent cycling in salt water would corrode the wire and change the original resistance.

Fig. 8 shows a new type of sealed construction in which the wire-wound ceramic core is enclosed in a pyrex glass tube. The ends of the glass tube are metallized and the monel metal ferrules are soldered to the metallized bands with pure lead. These resistors will meet Army-Navy Specification JAN-R-26 for Type GRW Grade 1—Class 1 resistors.

Sealed Relay

The sealing of relays is very similar to that for transformers. The same methods of mounting and terminal construction are used. Relays, however, cannot be potted. The best treatment is to dry them thoroughly before sealing them into the case. If a metal tube is attached to the case, the case can be evacuated and filled with an inert dry gas such as nitrogen. The metal tube can then be pinched off and soldered to maintain this inert gas. *Fig. 9* shows the steps in the sealing of a standard telephone relay.

BOOK REVIEWS

[*from page* 30]

the fundamental principles embodied in the preceding chapter. These are not practical problems or applications of the theory. Indeed the only practical applications of the theory appear in the last chapter which deals with elementary applications of the theory alone.

The first chapter deals with elementary electrical network theory involving Kirchhoff's Laws, impedances in series and parallel, the basic laws of electricity, Thévenin's Theorem, dimensions of electrical quantities and the general behavior of linear and non-linear circuit elements. This chapter is essentially non-mathematical for the most part and while somewhat brief, does serve as an excellent introduction to succeeding chapters which are essentially mathematical in character and deal with differential equation, hyperbolic functions, resistance-capacitance networks, resistance-inductance networks and networks containing resistance, capacitance and inductance. Transient analysis is essentially a complicated mathematical subject. Even this treatise which is intended largely as an introduction to the subject is greatly mathematical. However, classical treatment of the subject, involving conventional differential equations only, is employed throughout the book.

In spite of its mathematical nature, the book is not difficult to read. It does, however, require more attention and concentration than is likely to be given by the casual reader. The text is written in interesting style; it appears to be free from errors and it covers its field extremely well. The author develops each point in sufficient detail so that the reader is unlikely to misunderstand the intent. The text is particularly well illustrated, employing some 179 figures. It is recommended to all communication engineers interested in this absorbing subject.

INSULATING MATERIALS

[*from page* 43]

more flexibility than any of the ceramics.

We must therefore repeat the statement made at the beginning of this series of articles: there is no perfect insulation: each must be weighed on its own merits for the specific application.

Ceramics Classified

Considering properly only the ceramics, the distinction must be drawn between the glass or thermoplastic forms and the steatite or thermosetting forms. Certain likenesses exist between them,

but certain marked dissimilarities also exist.

Glass is formed at many temperatures, from about 700°C to about 2000°C. Steatite forms are fired between 1000°C. and 1500°C.

It is almost axiomatic that closer tolerances on dimensions can be held at the lower firing temperatures; and that certain other properties must be affected deleteriously by lower temperatures of firing. Porosity of the final structure for a given form of material will usually vary inversely as the firing temperature; harder, denser material will result from the higher temperatures, likewise. These statements are correct until overfiring of the body occurs.

The thermoplastics may be divided into two major sub-groupings: glass and glass-bonded mica. Each of these groups may be re-subdivided in turn. Glass may be a silica, silicate, borosilicate, or borate form; glass-bonded mica may be a compression-molded material, an injection molded material, or may occur in combination with other ceramic forms with a resultant higher dielectric constant.

The thermosetting forms may be divided into several groupings for ease of identification: steatite, porcelain, refractory, and rutile. Steatite, as a generic term, encompasses true steatite, cordierite, and zirconites. Refractory, as a term, also includes porous bodies such as alumina. Rutile (titanium dioxide chemically) is used to include the titantates.

The Thermoplastic Ceramics

Glass, as indicated above, is prepared from pure silica in combination with certain metal salts. Most commonly allied metal is boron, whose salt forms a low-melting-point glass itself. To glass is added certain metal combinations such as lead, aluminum, potash, soda, or lime. These materials, when added, will cause the firing temperatures and thermal expansions to change greatly, in addition to major changes in the electrical properties.

Borates or borosilicates, when fused in combination with mica, form glass-bonded mica, known by several proprietary names. As a thermoplastic the material lends itself to either compression or injection molding, a characteristic of the borate or borosilicate glass itself. Because of the extreme pressures and relatively high temperatures of molding, mechanical difficulties in extrusion molding this material, have been encountered. When other ceramic forms are added to the basic mica and glass, variations in the dielectric constants can be obtained.

The Thermosetting Plastics

Steatite—including the cordierite and zirconite types—is made from silicon di-

AMPERITE

THERMOSTATIC METAL TYPE
DELAY RELAYS
PROVIDE DELAYS RANGING FROM 1 TO 120 SECONDS

Other important features include:—

1. Compensated for ambient temperature changes from —40° to 110°F.
2. Contact ratings up to 115V-10a AC.
3. Hermetically sealed — not affected by altitude, moisture or other climate changes . . . Explosion-proof.
4. Octal radio base for easy replacement.
5. Compact, light, rugged, inexpensive.
6. Circuits available: SPST Normally Open; SPST Normally Closed.

WHAT'S YOUR PROBLEM? Send for "Special Problem Sheet" and Descriptive Bulletin.

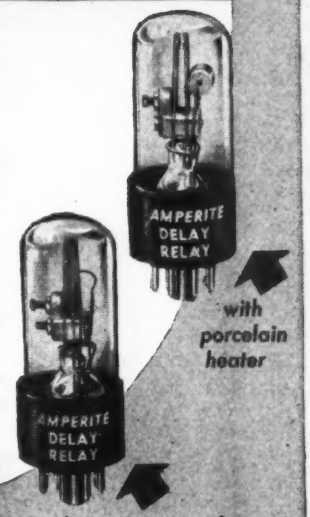

with porcelain heater
with heater wound directly on blade

AMPERITE CO. 561 BROADWAY NEW YORK 12, N. Y.
In Canada: Atlas Radio Corp., Ltd. 560 King St. W., Toronto

Specialists in Special Crystals

200 · 500 K. C.
EXTREMELY STABLE CRYSTALS FOR HIGH OUTPUT AND KEYING

Clamped low frequency plated crystal units with permanent frequency precision, ±.01% from −30°C to +60°C! None of the instability typical of old-style spaced units. A crystal that can take it, designed for use in such places as the 30-ton Coast Guard buoy transmitter, lighthouse transmitters, aircraft landing, etc. Each unit subjected to rigid Government specification keying tests. Mounted in aluminum hermetically-sealed holder.

* 3 point edge suspension. Top 2 points are spring adjusted, tamper-proof sealed for permanent frequency stability.
* Electrical contacts soldered to silver plate at nodal points — no mechanical strain.
* Hermetically sealed holder accomplished by spinning aluminum can over gasket under high pressure.
* Another Crystalab-engineered development.

Yankee Ingenuity makes us
SPECIALISTS IN SPECIAL CRYSTALS

Write Dept. R.M. for comprehensive catalogue "Selectronic Crystals" and facilities booklet "Crystalab Solves a Problem"

CRYSTAL RESEARCH LABORATORIES
INCORPORATED
LABORATORIES AND MAIN OFFICE: 29 ALLYN STREET, HARTFORD 3, CONN.
New York Office: 15 E. 26th Street, New York 10, N. Y. Phone, MU 5-2552

The Home Power Servant also handles many other jobs efficiently, dependably

For quiet operation, dependable performance, long life, maximum power per ounce of weight and per inch of space, use SM Fractional H.P. Motors. Models from 1/10th to 1/200th H.P. Speeds of 3,000 to 20,000 R.P.M. Voltage from 6 to 220 AC-DC Large volume production to your exact specifications.

Small Motors, Inc.

DEPT. 30
1308 ELSTON AVE. • CHICAGO 22

Manufacturers of special small universal, fractional H. P. motors, dynamotors, shaded pole motors, heater motors, generators.

Design, Engineering, Production

oxide in combination with other metal oxides. In the case of pure steatite, it is made from magnesium dioxide and silicon dioxide in combination. The raw material is known as talc.

Zirconite is made from zirconium dioxide-silicon dioxide; cordierite is made from a magnesium aluminum silicate.

Each of these materials has separate properties. Steatite is known for its extremely low electrical loss but also for its inability to resist extreme thermal shock conditions. Both zirconite and cordierite are known as relatively low loss materials with good thermal shock resistance. Both cordierite and zirconite have been used successfully in metal-to-ceramic sealing applications.

Again it is almost axiomatic that a low-loss material will resist thermal shock inversely proportional to its dielectric loss factor. Any thermal shock requirement will mean a compromise with the loss factor.

Porcelain is again a metal silicate. A similar material, fired at a lower temperature and therefore having more porosity is the refractory body. Electrical porcelain has been successfully employed for power frequency applications, but it is virtually unusable for extremely high frequency applications; refractory has been used frequently for heater plates where good dimensional tolerance and freedom from warpage is required. Alumina, a porous aluminum oxide form, has been used for high heat applications, such as vacuum tube electrode spacers, etc.

The most recent addition to the thermosetting ceramic family is the rutile form. Although known for some time, its properties were not fully exploited until the war. During that time, it was used successfully as the basic material for ceramic capacitors. Moderate use was made of this material before the war.

Rutile (titanium dioxide) has a dielectric constant of approximately 85. However, when procured in the titanate form with calcium, barium, etc., dielectric constants over 3000 have been obtained. Loss factors rise out of proportion to the dielectric constant, and the more over-compounded the material the higher the dissipation factor.

All of the thermosetting ceramics are capable of wet or dry pressing(defined only by the moisture content of the raw material) or of extrusion. After the initial forming by one of these processes, the part is slowly passed through a superheated oven and allowed to cool gradually. During this time, all moisture is driven from the body and chemical change takes place; if the drying-out process is carried far enough, the material becomes hard and vitrified.

The reader, I am sure, appreciates the fact that any introductory article must scan the field and leave more detailed analyses until a later time. Succeeding discussions will survey the glass-bonded micas, the glasses, the steatites, and the rutiles.

IRON CORES

[*from page* 40]

the core due to the free ends, is related to μ_e (from the graph) as follows:

$$\mu'_e = \mu_e \sqrt[3]{\frac{L}{l}}$$

Thus increasing the core to twice the coil length will yield a 26% increase in effective permeability; and a core 8 times longer than the coil will double the effects.

Typical Problems and Their Solution

Let us take a practical problem: a core material of permeability 10* in the form of a cylindrical slug having an L/D ratio of 2(.950 cm dia. by 1.9 cm long.) is put inside of a coil of mean turn diameter of 1.18 cm and also 1.9 cm long. The graph gives a value of μ_e as 4.6 at this L/D ratio. What is the resultant change in inductance?

Two corrections now need to be applied. The free end correction $\mu'_e = \mu_e \sqrt[3]{\frac{L}{l}}$ where μ'_e is the corrected value of effective permeability, μ_e is the graphical determined effective permeability, l = coil length; L' = core length. Substituting in the formulae, we find $\mu'_e = \mu_e = 4.6$. Now to correct for the area. The actual inductance change due to iron

$$\frac{L\,i}{L\,a} = \frac{(D^2)}{(d^2)}\,(\mu'_e - 1) + 1$$

D = core dia.
d = coil dia.

μ'_e is the graphical determined effective permeability corrected for end effects. In our case d = 1.18 cm and D = .95 cm. Substituting in the formulae:

$$\frac{L\,i}{L\,a} = \frac{.90}{1.39}\,(4.6 - 1) + 1 = 3.32$$

This value 3.32 which we have defined as effective permeability is the actual increase in inductance due to iron and agrees very closely with the measured value of 3.34.

Another case† where the core length 1.94 cm is mueh greater than coil length .42 cm. The graph for L/D = .45 and

*Core material permeability for different grades of materials is usually given in the catalogues of reliable core makers. See bulletin of Stackpole Carbon Co.
†Coils made by S. W. Inductor Co., Chicago, Ill.

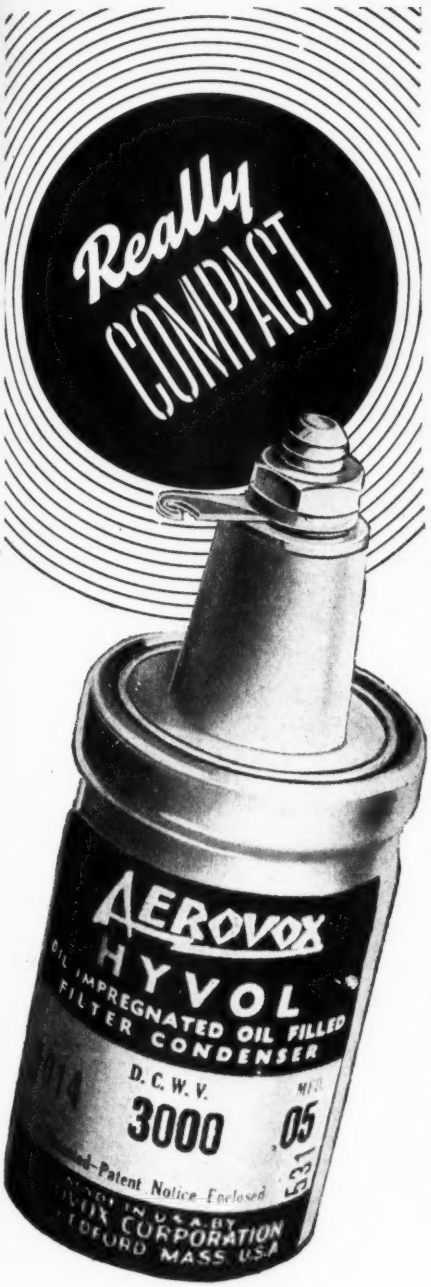

● Yes, that's the story. Aerovox Series "14" oil-filled capacitors are only 1-3/4" in diameter by 2-1/4" or 2-3/4" high. 3000 v. .01, .05 and .1 mfd. Unit here shown actual size. And that's compactness for your ultra-compact "rigs". ● Ask your Aerovox jobber for these compact capacitors. Ask for latest catalog, or write us direct. ● Meanwhile, be sure to look for that yellow label!

AEROVOX Capacitors
INDIVIDUALLY TESTED
AEROVOX CORP., NEW BEDFORD, MASS., U. S. A.
In Canada: AEROVOX CANADA LTD., HAMILTON, ONT.
Export: 13 E. 40 St., New York 16, N.Y. · Cable: 'ARLAB'

a composite permeability of 10, gives the effective permeability μ_e as 2.07. Applying the end correction

$$\mu'_e = 2.07 \times \sqrt[3]{\frac{1.94}{.44}} = 3.38$$

In the above case the mean turn diameter of the coil is .95 cm, the core diameter being 1.35 (diameters are used as they are easier to handle than areas). The actual inductance change is given by

$$\frac{Li}{La} = \frac{(.95)^2}{(1.35)^2} \times (3.38 - 1) + 1 = 2.17$$

Here the calculated μ_e is 2.17, the measured value is 2.35, a slight disagreement due to the leakage in the pancake type of coil.

Conclusion

Thus we now have at hand the figures for the expected inductance increase: for an entirely closed core (toroid) in which the effective and apparent permeabilities are the same, and for an open core having free ends; the enclosed graphs fully covering the determination needed. But there is also a wide variety of semi-closed magnetic cores, such as the pot type (pill box), E & I shaped cores and binocular pairs. Obviously the effective permeability of these structures will have a value lying between the closed toroid and the open cylindrical slug type. The analysis of such forms is also possible but has not been undertaken by the writers, due to the multitude of shapes and sizes and the complete lack of standard sizes.

It remains to mention that there are compressed materials composed of flake type powder (electrolytic iron) which is so pressed that the flakes lie substantially along the magnetic axis of the core. In such case we have directional permeability, greater in the direction of its intended use and care should be taken in measuring such slugs so that the magnetic axis is in the right direction.

It is hoped that with the completion of this study of effective permeability the engineer will find consideration of the different applications of iron cored coils an easier task. He can then more quickly arrive at the optimum coil design from the standpoint of: (a) coverage in movable tuning cores; (b) efficiency in iron cored loop antennae; compactness and efficiency of fixed coils.

References:

1. Published by General Aniline Works
2. Foster & Newton—*Proc. I. R. E.*, 1941, Vol. 29, Page 266
3. Howe—*Electrician*, 1925, Page 684
4. Latour—*Proc. I. R. E.*, 1919, Pages 7, 61
5. T. Spooner—Properties and Testing of Magnetic Material, Page 220
6. G. W. O. Howe—Iron Powder Compound Cores for Coils—*Wireless Eng.*, 1933, Page 101
7. Bozorth & Chapin—*Journal of Applied Physics*, 1942, Vol. 13, Page 320

TRANSFORMERS FOR POSTWAR ELECTRONIC APPLICATIONS

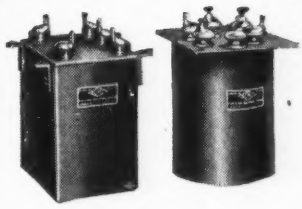

● Designed to meet your specifications, mechanically and electronically

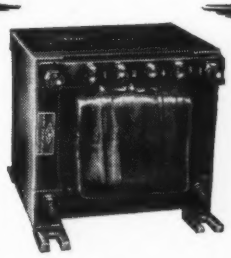

Open type, plastic impregnated transformers provide adequate weatherproofing for certain applications

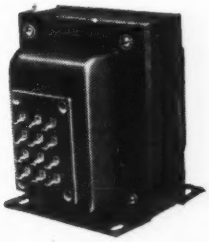

This special Radio Power transformer consists of primary winding, high voltage secondary winding and filament winding.

THE ACME ELECTRIC & MFG. CO.
CUBA, N. Y.

Acme Electric
TRANSFORMERS

Everything FOR THE SERVICE DEALER

We have, ready for immediate delivery, a complete stock of tools, replacement parts, intercommunication systems, public address systems, test equipment . . . everything in radio equipment for the progressive service dealer. For big profit items . . . for quick delivery . . . place your order now with Leo.

6 TUBE AC-DC KIT

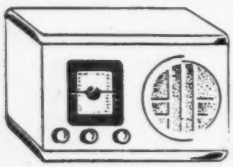

Complete, ready for assembly.

$23.75

Cat. No. 7-691

A two-band, superheterodyne kit with all tubes, speaker, chassis, and all parts for easy assembly. Broadcast band from 540 to 1620 KC. Short wave from 5.7 to 18.3 MC. Cabinet, $5.25.

WRL MULTITESTER

All purpose tester. Money back guarantee.

$18.75

less leads

Cat. No. 16-439

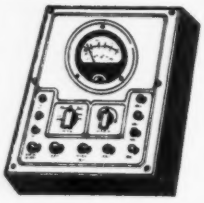

Handles AC DC Voltmeter, DC Milliammeter, high and low range Ohmmeter. 3" meter with sturdy D'Aronsval movement. Size 5½x8x3¾.

Exclusive at WRL! Our latest flyer . . . 12 page V-J edition of merchandise and radio values. . FREE.

Handy Tube-Base Calculator 25c

Giant Radio Reference Map, 3½x4½ ft. . . 15c

MAIL TODAY R-11

Wholesale Radio Laboratory
744 West Broadway Council Bluffs, Iowa

☐ Rush_____WRL Multitesters. Cost, $_____
☐ Send_____6-tube AC DC Kits and cabinets. Cost, $_____
☐ I want a tube-calculator. 25c enclosed.
☐ Ship me your radio map. 15c enclosed.
☐ Send me your new V-J Flyer free.
Enclosed is $_____; Balance C.O.D.

Name_____
Address_____
Town_____State_____
I am ☐ an amateur; ☐ experimenter; ☐ service man.

We invite industrial inquiries for electronic equipment and devices of all kinds.

QUICK SERVICE FROM LEO "same day" delivery service from the heart of the nation . . . on anything in radio. Order today.

Wholesale RADIO LABORATORIES

"HIGH FIDELITY"

[*from page* 37]

tionable phase shifts so prevalent with other circuits.

A further improvement in amplifier design results when balanced feedback[7] is employed. The advantages of the usual degenerative feedback are then maintained without an appreciable loss in amplification and with a much sharper cutoff characteristic at the ends of the desired frequency range. Abrupt cutoffs as shown in *Fig. 11* are particularly desirable for both radio and phonograph reproduction. A sharp cutoff at the high frequency end of the range eliminates distortion that might be present due to higher order harmonics, while a sharp cutoff at the low frequency end will materially reduce turntable rumble.

The sound waves of music and speech are not pure tones but consist of fundamentals and often many harmonics or overtones. These harmonics are the means by which the various instruments are distinguished from one another and provide the individuality and quality of the music or speech. Such complex waves, which are not often harmonically related, give rise to intermodulation products if at any point in the system a non-linearity exists. The result is quite harsh and disagreeable to the ear. Distortion of this type (often called two-frequency distortion) may not show up in the ordinary harmonic analysis; in fact, higher harmonics of the usual amplitude type are often outside the range of audibility and are therefore not important. But intermodulation products may lie anywhere in the band, and for this reason it is imperative that they be measured and minimized if necessary. A common complaint when listening to a system having appreciable intermodulation products is that when an entire orchestra is being reproduced the sound seems mixed up or run together, yet when a solo part is heard the quality suddenly becomes clear. This is because fewer intermodulation products are formed. A common source of two-frequency distortion is often due to inadequate low frequency carrying capacity, so the power capacity of the unit should be of the order of 20 or more watts.

If it were not for the non-linear characteristic of the ear, especially when the volume level is changed, the problem of designing a high fidelity system would be comparatively simple. A common fault with many high fidelity receivers lies in the fact that proper compensation for the ear characteristics have not been taken into account at all volume levels. The ear has a comparatively flat response only at extremely high volume levels; this condition is reached at approximately the same point where the sensation of feeling begins and the sensation of hearing stops.

Referring to the equal intensity contour of the ear it is apparent that a system having a frequency characteristic which is flat is not to be desired. At volume levels corresponding to that of a very loud radio, sound reproduction usually seems to be quite good. This is true for two reasons; the level more nearly represents that of the original, and the ear characteristic is more nearly flat. However, even at levels of 85 db above threshold an increase of approximately 6 db is required at 65 cycles to make it equivalent to that at the middle frequencies. In the region of 3000 cycles (most sensitive region of the ear) a decrease of 3 to 5 db is desirable. As the frequency is increased up to 8000 cycles the amplitude must again be increased, as at the low frequencies, by approximately 10 db. These corrections are required to make up for deficiencies of the ear at high intensity levels. As the sound intensity is decreased to very quiet, additional compensation is required. As much as 30 db at 65 cycles and 12 db at 8000 cycles being required.

It is obvious that with such a non-linear characteristic as this some sort of compensated volume control must be used, which automatically adjusts the frequency response as the sound output is changed. Without compensation, the quality becomes unnatural at low volume levels and, since more persons listen at these levels, it is important that compensation be correct. Bass compensation has long been more or less standard practice but little attention had been given to correlating the compensation with the characteristic of the ear. Automatic treble compensation has not been so widely used. *Fig. 12* shows how the frequency response of a high-fidelity system should vary over the volume range ordinarily used in the home.

Summarizing we find the following points of interest:

1. A frequency range of 65 to 11,000 cycles having a relatively sharp cutoff at each end of the range is the most desirable. Practically a balanced range of 70 to 8000 cycles will be entirely adequate for most programs.
2. The amplitude characteristic should follow the equal loudness contour curves of the ear at their respective levels.
3. Amplitude and intermodulation distortion should not exceed two percent.
4. The acoustic response should be as nearly uniform as possible, at least over an angle of 90 degrees.
5. Power capacity to handle peaks of power with a dynamic volume range of at least 45 db.

Recommendations for accomplishing these requirements are:

1. Beam power amplifier of at least 20 watts output.

[*Continued on page* 74]

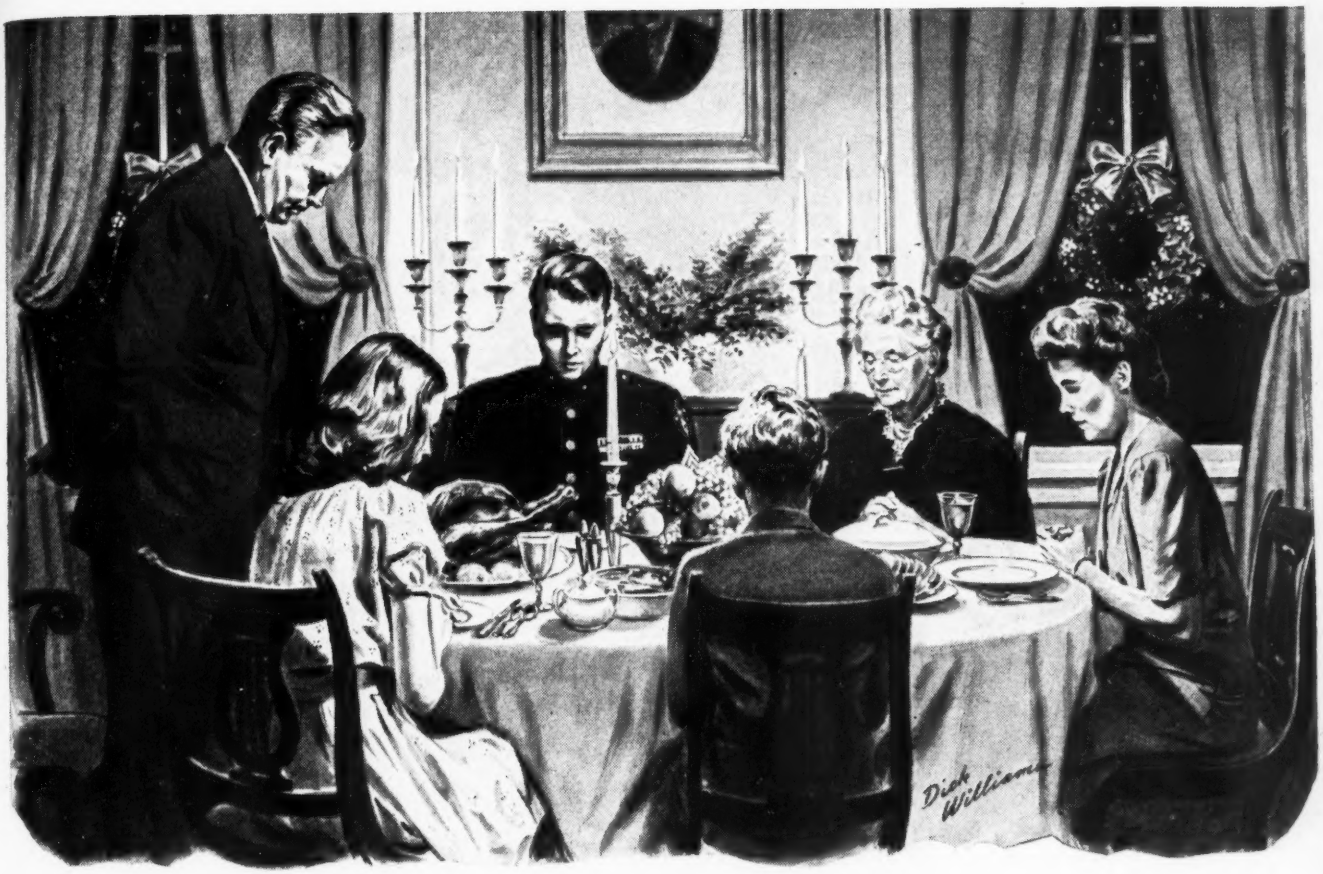

What's the other thing we ought to do this Christmas?

FOR the last four years, the Christmas phrase "Peace on earth, good will to man" has had a pretty hollow, bitter ring.

This year, it won't.

And surely, one thing each of us will want to do this Christmas is to give thanks that peace has finally come to us—both peace and victory.

One other thing we ought to do: In our giving, this year, let's choose—first—the kind of gift that helped to bring us peace and victory and will now help us to enjoy them.

★

Victory Bonds take care of the men who fought for us—provide money to heal them, to give them a fresh start in the country they saved.

Victory Bonds help to insure a sound, prosperous country for us all to live and work in.

Victory Bonds mean protection in emergencies — and extra cash for things we want to do ten years from now.

★

Choose—first—the finest gift in all the world, this Christmas.

Give Victory Bonds!

Give the finest gift of all – VICTORY BONDS!

RADIO MAGAZINES, INC.

★ *This is an official U. S. Treasury advertisement—prepared under auspices of Treasury Department and War Advertising Council* ★

DEPENDABLE!

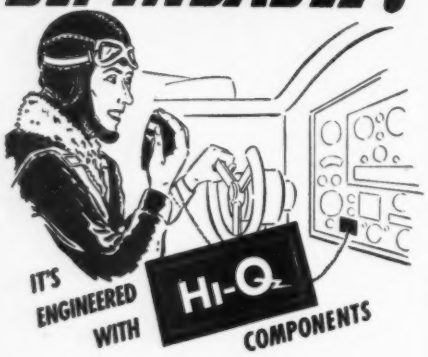

Made right . . . to work right . . . and stay right. Whether in stock ratings or to your own specifications you will find Hi-Q components precise, dependable and long lived. Send for samples and complete information.

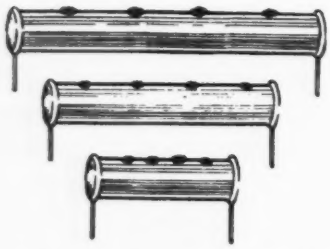

Hi-Q Ceramic Capacitors are of titanium dioxide (for temperature compensating types) and are tested for physical dimensions, temperature co-efficient, power factor and dielectric strength. CI type with axial leads; CN type with parallel leads.

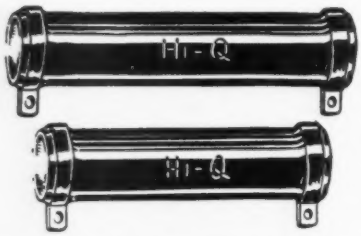

Hi-Q Wire Wound Resistors can be produced promptly and in quantity — with quality physical specifications and high performance electric specifications.

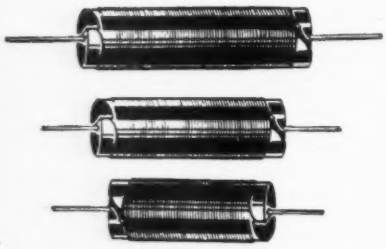

Hi-Q Choke Coils are uniform in their high quality performance. Ruggedly constructed for long service.

ELECTRICAL REACTANCE CORPORATION
FRANKLINVILLE, N. Y.

2. Degeneration or balanced-feedback circuit in the amplifier.
3. Two or more speakers with suitable sound diffusing elements.
4. Compensated frequency response for all volume levels.

It must be recognized that the ear is the final judge of the faithfulness of reproduction and that psychological, physiological and physical (room acoustics) effects must be considered.

The goal for the designer of high fidelity equipment is reached when the reproduction sounds like the original and not like a radio. True high fidelity has then been achieved.

References:

1. Fletcher, H.—Speech and Hearing—D. Van Nostrand, N. Y.
2. Steinberg, Montgomery & Gardner—World's Fair Hearing Tests—*Bell System Tech. Jour.*—Oct. 1940.
3. Fletcher, H.—Hearing, the Determining Factor for High Fidelity Transmission—*Proc. IRE*, June 1942.
4. Seacord—Room Noise at Subscriber's Telephone Locations—*Jour. Acoustic Society of America*—July 1940.
5. Olsen & Massa—Applied Acoustics—Blakiston, Phila. 1934.
6. Terman—Feedback Amplifier Design—*Electronics*—Jan. 1937.
7. Ginzton—Balanced Feed-Back Amplifiers—*Proc. IRE*, Nov. 1938.
8. Hilliard—Distortion Tests by the Intermodulation Method—*Proc. IRE*, Dec. 1941.

Bibliography for Additional Reading

1. Sivian, Dunn & White—Absolute Amplitudes & Spectra of Certain Musical Instruments & Orchestras — *Jour. Acoustic Society of America*—Jan. 1931.
2. Fletcher, H. — Auditory Patterns — *Rev. Mod. Physics*, Jan. 1940.
3. Snow—Audible Frequency Ranges of Music, Speech & Noise—*Jour. Amer. Standard Association*—July, 1931.
4. Hanson—Down to Earth on High Fidelity—RADIO, Oct. 1944.
5. Wood—Physics of Music—Sherwood Press, Cleveland, O. 1944.
6. Wolf & Malter—Directional Radiation of Sound—*Jour. Acoustic Society of America*—Oct., 1930.
7. Fletcher & Munson—Relation between Loudness & Masking—*Jour. Acoustic Society of America*—July, 1937.
8. Fletcher & Steinberg—Articulation Testing Methods—*Bell System Technical Journal*—Oct., 1929.
9. Chinn & Eisenberg—Tonal-Range & Sound-Intensity Preferences of Broadcast Listeners—*Proc. IRE*—Sept., 1945.
10. Olson & Hackley—Horn & Direct Radiator Loud Speaker—*Proc. IRE*—Dec., 1936.
11. Massa—Horn Type Loud Speakers—*Proc. IRE*—June, 1938.

• Ted McElroy
World's Largest Manufacturer of Wireless Telegraphic Apparatus
COMPLETE CENTRAL OFFICE EQUIPMENT
McElroy Manufacturing Corp.
82 Brookline Avenue • Boston, Massachusetts

Help Wanted!
TECHNICAL EDITORS!!

We are increasing our staff—need a technical editor and assistant technical editors having practical knowledge of radio servicing.

Must be able to write simply on servicing methods, test equipment applications, special circuit problems, trouble shooting, installation and servicing of FM and television receivers and antennas, bench short cuts and miscellaneous subjects incidental to the radio service field.

Excellent remuneration. Give details, experience, etc., so an interview can be arranged. Write to:

EDITOR,
RADIO SERVICE DEALER,
342 Madison Avenue,
New York 17, N. Y.

FREE TO YOU
COLOR CODE and OHMS LAW CALCULATOR

Great Time Saver

Burstein-Applebee of Kansas City offers you this great convenience FREE. Easy to work. Solves many problems in a jiffy. FREE to Radio men, electronic engineers and others in the business. Attach coupon to your letterhead.

MAIL COUPON NOW

BURSTEIN-APPLEBEE CO.
1012 McGEE ST.
KANSAS CITY 6, MO.
Send me FREE Color Code and Ohms Law Calculator along with latest catalog.

I am _____
STATE CONNECTION IN INDUSTRY
NAME _____
ADDRESS _____
TOWN _____ STATE _____

Widest range of tracer code identification

. . . plus maximum insulation resistance

Spiralon, the newly developed Surco plastic insulated wire, embodies many decided improvements for tracer code identified wire, particularly reduction in weight and space, and smaller sizes of O. D. Spiralon's coding combinations are unlimited with colored spiral stripes, easily and immediately seen. Because the spiraling does not add color pigments to the primary covering, Spiralon retains increased insulating resistance and allowance for greater voltage.

Covered with a nylon jacket, Spiralon also proves highly resistant to fungi and abrasion, eliminates voids, reduces creepage when terminals are being soldered, and injury to insulation when in contact with a hot soldering iron. In fact, all insulating and protective qualities are greatly increased with this thin nylon jacket, which is resistant to high heat and low temperatures, and which raises the rupture point far above that of the average lacquer coating on braid. Send for complete specifications.

- SHIELDED WIRE
- HIGH FREQUENCY WIRE and CABLE
- VINYL RESIN SHEETING
- INSULATING TUBING
- INSULATING TAPE

Address Dept. J

Surprenant
ELECTRICAL INSULATION CO.
84 Purchase St., Boston 10, Mass.

ADVERTISING INDEX

ADVERTISER	PRODUCT	PAGE
Acme Elec. & Mfg. Co.	*Transformers*	71
Aerovox Corporation	*Capacitors*	71
Allied Radio Company	*Electronic Equipment*	16
Altec-Lansing Corporation	*Loudspeakers*	25
American Phenolic Corporation	*Plugs, Cables, Connectors, Sockets*	9
Amperite Co.	*Relays*	69
Andrew Co.	*Cables*	18
Bell Telephone Labs.	*Institutional*	10
Bliley Electric Co.	*Quartz Crystals*	27
Burstein-Applebee Co.	*Electronic Equipment*	74
Capitol Radio Engineering Inst.	*Educational*	28
Cinaudagraph Speakers, Inc.	*Speakers*	31
Concord Radio Corporation	*Electronic Equipment*	26
Crystal Research Labs., Inc.	*Supersonic Crystals*	69
Drake Mfg. Co.	*Dual Light Assemblies*	30
D-X Radio Products Co.	*Coils*	30
Eitel-McCullough, Inc.	*Tubes*	12
Electrical Reactance Corp.	*Capacitors, Resistors, Coils*	74
Electronic Mechanics, Inc.	*Insulation Materials*	1
Federal Tel. & Radio Corp.	*Cable, Wire*	17, 21
Formica Insulation Co., The	*Laminated Plastics*	13
Goodrich Co., The B. F.	*Insulation Material*	76
Guardian Electric Co.	*Relays*	11
Hamilton, Alexander, Inst.	*Educational*	64
Hallicrafters, RFC	*Communications Equipment*	Cover 4
Harvey Radio Co.	*Radio & Electronic Equip.*	68
Harvey Radio Labs., The	*Electronic Instruments*	Cover 3
Heintz & Kaufman, Ltd.	*Transmitting Tubes*	61
International Resistance Co.	*Resistors*	5
Jefferson Electric Co.	*Transformers*	19
Jensen Radio Mfg. Co.	*Acoustic Equipment*	14
Johnson Co., E. F.	*Transmitter Components*	23
McElroy Mfg. Co.	*Wireless Tel. Apparatus*	74
Monarch Mfg. Co.	*Measuring, Testing, Calibrating Equipment*	67
Mycalex Corp. of America	*Insulating Materials*	24
National Union Radio Corp.	*Electronic Tubes*	29
Ohmite Mfg. Co.	*Rheostats, Resistors, Tap Switches*	20
Racon Electric Co.	*Speakers*	63
Radiart Corporation	*Aerials, Vibrators*	32
Radio Wire Television	*Electronic Equipment*	66
Raytheon Manufacturing Corp.	*Tubes*	Cover 2
Rider, John F., Publ. Inc.	*Technical Books*	60
Russell Electric Co.	*Record Changers, Motors, Drives*	2, 22
Small Motors, Inc.	*Fractional H.P. Motors*	70
Sperry Gyroscope Co., Inc.	*Precision Instruments*	6, 7
Sprague Electric Co.	*Resistors*	59
Sterling Silica Gel Co.	*Dehydrant*	15
Surprenant Elec'l Insulation Co.	*Plastic Insulated Wire*	75
Sylvania Electric Products Co.	*Tubes*	57
Tech Laboratories	*Attenuators*	67
Triplett Elec. Instru. Co.	*Portable Instruments*	62
U. S. Treasury Dept.	*Victory Bonds*	73
Wholesale Radio Laboratories	*Electronic Equipment*	72
Wrigley Jr., Co., Wm.	*Institutional*	58
Zenith Optical Laboratory	*Television Mirrors, Reflectors*	65

Customer Service Laboratory finds constant product improvements

THANKS to the efforts of the development staff in B. F. Goodrich Chemical Company's Customer Service Laboratory—thanks to their joint efforts with the country's leading wire and cable manufacturers—thanks to GEON polyvinyl materials—vast improvements are being made in wire insulation.

Consider the insulating materials of only a very few years ago. Then look at the many advantages offered by wire insulation made from GEON. Most important are superior electrical properties which permit thinner coatings of insulation—lighter weight, easier handling, more conductors per conduit, greater safety.

GEON's chemical properties provide insulation that resists water, oils and greases, most acids and chemicals, sunlight, aging, ozone, heat, cold, flame, and many other normally destructive factors.

GEON's physical properties result in an almost indestructible material—thanks to high abrasion resistance and flex life. Insulation made from GEON is smooth—easy to handle, easy to install. It can be colored through the entire NEMA range. And its uses run all the way from slip-on "spaghetti" for fine radio hook-up wire to insulation for underground power cable.

Ask your supplier for wire and cable insulated with GEON. B. F. Goodrich Chemical Company, Department WW-11, Rose Building, Cleveland 15, Ohio.

Geon
Polyvinyl Materials

B. F. Goodrich Chemical Company

A DIVISION OF
THE B. F. GOODRICH COMPANY

PRESS OF THE WILSON H. LEE CO.
ORANGE, CONN. PRINTED IN U.S.A.

This HARVEY Regulated Power Supply 106 PA
Is Doing a Dependable Job for DOUGLAS
HAR-CAM
HARVEY OF CAMBRIDGE

Switches

Shown above are a few of the many types of micro-switches, toggle switches, knife switches, rotary switches, band switches, etc., now available through the Hallicrafters Co., Chicago, agent for the Reconstruction Finance Corporation under contract SIA-3-24.

Other radio and electronic components such as resistors and condensers are also available in large quantities. Send the coupon for further details.

hallicrafters RADIO

THE HALLICRAFTERS CO., AGENT FOR RFC UNDER CONTRACT SIA-3-24
MANUFACTURERS OF RADIO AND ELECTRONIC EQUIPMENT

THESE VALUABLE ITEMS *Available Now* or very soon. Write, wire or phone for further information.

• head phones • test equipment • component parts • marine transmitters and receivers • code practice equipment • sound detecting equipment • vehicular operation police and command sets • radio beacons and airborne landing equipment.

CLIP THIS COUPON NOW

RFC DEPARTMENT 310, HALLICRAFTERS
5025 West 65th Street • Chicago 38, Illinois

☐ Send further details and price on Switches and component parts

☐ Send listings of other available items

Especially interested in_____

NAME_____

ADDRESS_____

CITY_____ ZONE____

STATE_____

COPYRIGHT 1945 THE HALLICRAFTERS CO.